US009435274B2

(12) **United States Patent**
**Wong et al.**

(10) **Patent No.: US 9,435,274 B2**
(45) **Date of Patent: Sep. 6, 2016**

(54) **SYSTEM AND METHOD FOR MANAGING THE PERIOD OF A CONTROL LOOP FOR CONTROLLING AN ENGINE USING MODEL PREDICTIVE CONTROL**

(71) Applicant: **GM Global Technology Operations LLC**, Detroit, MI (US)

(72) Inventors: **Kevin C. Wong**, Ann Arbor, MI (US); **Christopher E. Whitney**, Commerce, MI (US); **Alberto Bemporad**, Lucca (IT); **Daniele Bernardini**, Siena (IT)

(73) Assignee: **GM Global Technology Operations LLC**, Detroit, MI (US)

( * ) Notice: Subject to any disclaimer, the term of this patent is extended or adjusted under 35 U.S.C. 154(b) by 360 days.

(21) Appl. No.: **14/225,492**

(22) Filed: **Mar. 26, 2014**

(65) **Prior Publication Data**

US 2015/0275783 A1 Oct. 1, 2015

(51) **Int. Cl.**

| | |
|---|---|
| ***F02D 41/14*** | (2006.01) |
| ***F02D 28/00*** | (2006.01) |
| ***F02D 13/02*** | (2006.01) |
| ***F02D 41/00*** | (2006.01) |
| ***G05B 13/04*** | (2006.01) |

(Continued)

(52) **U.S. Cl.**

CPC ..... ***F02D 28/00*** (2013.01); ***F02D 13/0219*** (2013.01); ***F02D 41/0002*** (2013.01); ***F02D 41/1401*** (2013.01); ***G05B 13/048*** (2013.01); *F02D 11/105* (2013.01); *F02D 41/26* (2013.01); *F02D 41/263* (2013.01); *F02D 2041/001* (2013.01); *F02D 2041/1412* (2013.01); *F02D 2041/1418* (2013.01); *F02D 2041/1433* (2013.01)

(58) **Field of Classification Search**

CPC ..... F02D 41/14; F02D 2041/1412; F02D 2041/1418; F02D 2041/1433

See application file for complete search history.

(56) **References Cited**

U.S. PATENT DOCUMENTS

| | | | |
|---|---|---|---|
| 4,161,929 | A | 7/1979 | Nohira et al. |
| 5,070,846 | A | 12/1991 | Dudek et al. |

(Continued)

FOREIGN PATENT DOCUMENTS

| | | | |
|---|---|---|---|
| CN | 1594846 | A | 3/2005 |
| WO | WO-03-065135 | A1 | 8/2003 |

OTHER PUBLICATIONS

Kolmanovsky, I., "Towards Engine and Powertrain Control Based on Model Predictive Control," (Sep. 28, 2012), Powerpoint Presentation, 47 slides.

(Continued)

*Primary Examiner* — Erick Solis

(57) **ABSTRACT**

A system according to the present disclosure includes a model predictive control (MPC) module, an actuator module, and a remedial action module. The MPC module performs MPC tasks that include predicting operating parameters for a set of possible target values and determining a cost for the set of possible target values based on the predicted operating parameters. The MPC tasks also include selecting the set of possible target values from multiple sets of possible target values based on the cost and setting target values to the possible target values of the selected set. The actuator module controls an actuator of an engine based on at least one of the target values. The remedial action module selectively takes a remedial action based on at least one of an amount of time that elapses as the MPC tasks are performed and a number of iterations of the MPC tasks that are performed.

**20 Claims, 6 Drawing Sheets**

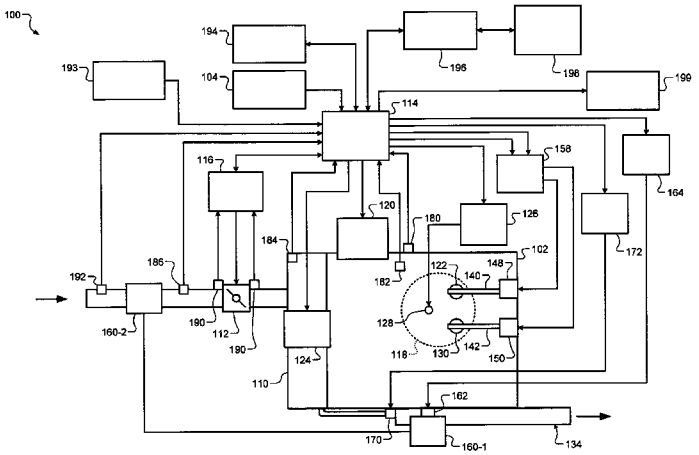

(51) **Int. Cl.**

| | |
|---|---|
| *F02D 41/26* | (2006.01) |
| *F02D 11/10* | (2006.01) |

(56) **References Cited**

U.S. PATENT DOCUMENTS


| | | | | |
|---|---|---|---|---|
| 5,101,786 | A | 4/1992 | Kamio et al. | |
| 5,268,835 | A * | 12/1993 | Miyagaki | G05B 13/0285 700/31 |
| 5,270,935 | A * | 12/1993 | Dudek | F02D 41/1401 123/480 |
| 5,293,553 | A | 3/1994 | Dudek et al. | |
| 5,347,446 | A * | 9/1994 | Iino | G05B 13/048 700/29 |
| 5,609,136 | A * | 3/1997 | Tuken | F02D 41/14 123/357 |
| 5,706,780 | A | 1/1998 | Shirakawa | |
| 5,727,528 | A | 3/1998 | Hori et al. | |
| 5,775,293 | A | 7/1998 | Kresse | |
| 5,921,219 | A | 7/1999 | Frohlich et al. | |
| 6,014,955 | A | 1/2000 | Hosotani et al. | |
| 6,155,230 | A | 12/2000 | Iwano et al. | |
| 6,532,935 | B2 | 3/2003 | Ganser et al. | |
| 6,606,981 | B2 | 8/2003 | Itoyama | |
| 6,704,638 | B2 | 3/2004 | Livshiz et al. | |
| 6,714,852 | B1 | 3/2004 | Lorenz et al. | |
| 6,826,904 | B2 | 12/2004 | Miura | |
| 6,840,215 | B1 | 1/2005 | Livshiz et al. | |
| 6,985,809 | B2 | 1/2006 | Yasui | |
| 7,016,779 | B2 | 3/2006 | Bowyer | |
| 7,021,282 | B1 | 4/2006 | Livshiz et al. | |
| 7,051,058 | B2 | 5/2006 | Wagner et al. | |
| 7,076,953 | B2 | 7/2006 | Kreso | |
| 7,274,986 | B1 | 9/2007 | Petridis et al. | |
| 7,275,374 | B2 | 10/2007 | Stewart et al. | |
| 7,328,577 | B2 | 2/2008 | Stewart et al. | |
| 7,395,147 | B2 | 7/2008 | Livshiz et al. | |
| 7,400,967 | B2 | 7/2008 | Ueno et al. | |
| 7,433,775 | B2 | 10/2008 | Livshiz et al. | |
| 7,441,544 | B2 | 10/2008 | Hagari | |
| 7,472,692 | B2 | 1/2009 | Nakagawa et al. | |
| 7,614,384 | B2 | 11/2009 | Livshiz et al. | |
| 7,650,225 | B2 | 1/2010 | Nakagawa et al. | |
| 7,703,439 | B2 | 4/2010 | Russell et al. | |
| 7,715,975 | B2 | 5/2010 | Yamaoka et al. | |
| 7,775,195 | B2 | 8/2010 | Schondorf et al. | |
| 7,783,409 | B2 | 8/2010 | Kang et al. | |
| 7,813,869 | B2 | 10/2010 | Grichnik et al. | |
| 7,885,756 | B2 | 2/2011 | Livshiz et al. | |
| 7,941,260 | B2 | 5/2011 | Lee et al. | |
| 7,967,720 | B2 | 6/2011 | Martin et al. | |
| 8,032,235 | B2 * | 10/2011 | Sayyar-Rodsari | G05B 13/048 700/258 |
| 8,041,487 | B2 | 10/2011 | Worthing et al. | |
| 8,050,841 | B2 | 11/2011 | Costin et al. | |
| 8,073,610 | B2 | 12/2011 | Heap et al. | |
| 8,103,425 | B2 | 1/2012 | Choi et al. | |
| 8,103,428 | B2 | 1/2012 | Russ et al. | |
| 8,116,954 | B2 | 2/2012 | Livshiz et al. | |
| 8,176,735 | B2 | 5/2012 | Komatsu | |
| 8,255,139 | B2 | 8/2012 | Whitney et al. | |
| 8,307,814 | B2 | 11/2012 | Leroy et al. | |
| 8,447,492 | B2 | 5/2013 | Watanabe et al. | |
| 8,468,821 | B2 | 6/2013 | Liu et al. | |
| 8,483,935 | B2 | 7/2013 | Whitney et al. | |
| 8,560,204 | B2 | 10/2013 | Simon, Jr. et al. | |
| 8,739,766 | B2 | 6/2014 | Jentz et al. | |
| 8,862,248 | B2 | 10/2014 | Yasui | |
| 8,954,257 | B2 | 2/2015 | Livshiz et al. | |
| 9,052,997 | B2 | 6/2015 | Ono | |
| 9,062,631 | B2 | 6/2015 | Kinugawa et al. | |
| 9,075,406 | B2 | 7/2015 | Nakada | |
| 9,127,614 | B2 | 9/2015 | Ueno et al. | |
| 9,145,841 | B2 | 9/2015 | Miyazaki et al. | |
| 9,175,628 | B2 | 11/2015 | Livshiz et al. | |
| 9,243,524 | B2 | 1/2016 | Whitney et al. | |
| 2002/0038647 | A1 | 4/2002 | Tashiro et al. | |
| 2002/0078924 | A1 | 6/2002 | Yagi | |
| 2002/0179050 | A1 | 12/2002 | Soliman et al. | |
| 2003/0074892 | A1 | 4/2003 | Miura | |
| 2003/0110760 | A1 | 6/2003 | Shirakawa | |
| 2003/0145836 | A1 | 8/2003 | Linna et al. | |
| 2004/0116220 | A1 | 6/2004 | Yamamoto et al. | |
| 2005/0065691 | A1 | 3/2005 | Cho | |
| 2005/0131620 | A1 | 6/2005 | Bowyer | |
| 2005/0166900 | A1 | 8/2005 | Song et al. | |
| 2005/0171670 | A1 | 8/2005 | Yoshioka et al. | |
| 2005/0193739 | A1 | 9/2005 | Brunell et al. | |
| 2005/0267608 | A1 | 12/2005 | Nishira et al. | |
| 2006/0137335 | A1 | 6/2006 | Stewart et al. | |
| 2006/0199699 | A1 | 9/2006 | Berglund et al. | |
| 2007/0068159 | A1 | 3/2007 | Ueno et al. | |
| 2007/0174003 | A1 | 7/2007 | Ueno et al. | |
| 2008/0127938 | A1 | 6/2008 | Hagari | |
| 2008/0271718 | A1 | 11/2008 | Schondorf et al. | |
| 2008/0308066 | A1 | 12/2008 | Martin et al. | |
| 2009/0018733 | A1 | 1/2009 | Livshiz et al. | |
| 2009/0033264 | A1 | 2/2009 | Falkenstein | |
| 2009/0037066 | A1 | 2/2009 | Kuwahara et al. | |
| 2009/0037073 | A1 | 2/2009 | Jung et al. | |
| 2009/0118968 | A1 | 5/2009 | Livshiz et al. | |
| 2009/0118969 | A1 | 5/2009 | Heap et al. | |
| 2009/0118972 | A1 | 5/2009 | Baur et al. | |
| 2009/0143959 | A1 | 6/2009 | Yamaoka et al. | |
| 2009/0229562 | A1 | 9/2009 | Ramappan et al. | |
| 2009/0292435 | A1 | 11/2009 | Costin et al. | |
| 2010/0049419 | A1 | 2/2010 | Yoshikawa et al. | |
| 2010/0057283 | A1 | 3/2010 | Worthing et al. | |
| 2010/0057329 | A1 | 3/2010 | Livshiz et al. | |
| 2010/0075803 | A1 | 3/2010 | Sharples et al. | |
| 2010/0116249 | A1 | 5/2010 | Guerrassi et al. | |
| 2010/0116250 | A1 | 5/2010 | Simon, Jr. et al. | |
| 2010/0180876 | A1 | 7/2010 | Leroy et al. | |
| 2010/0211294 | A1 | 8/2010 | Soejima | |
| 2010/0263627 | A1 | 10/2010 | Whitney et al. | |
| 2010/0268436 | A1 | 10/2010 | Soejima et al. | |
| 2010/0280738 | A1 | 11/2010 | Whitney et al. | |
| 2011/0034298 | A1 | 2/2011 | Doering et al. | |
| 2011/0045948 | A1 | 2/2011 | Doering et al. | |
| 2011/0066308 | A1 | 3/2011 | Yang et al. | |
| 2011/0087421 | A1 | 4/2011 | Soejima et al. | |
| 2011/0100013 | A1 | 5/2011 | Whitney et al. | |
| 2011/0113773 | A1 | 5/2011 | Liu et al. | |
| 2011/0144838 | A1 | 6/2011 | Matthews et al. | |
| 2011/0264353 | A1 | 10/2011 | Atkinson et al. | |
| 2012/0065864 | A1 | 3/2012 | Whitney et al. | |
| 2012/0150399 | A1 | 6/2012 | Kar et al. | |
| 2012/0203434 | A1 | 8/2012 | Sujan et al. | |
| 2013/0032123 | A1 | 2/2013 | Kinugawa et al. | |
| 2013/0032127 | A1 | 2/2013 | Jentz et al. | |
| 2013/0060448 | A1 | 3/2013 | Nakada | |
| 2013/0080023 | A1 | 3/2013 | Livshiz et al. | |
| 2013/0104859 | A1 | 5/2013 | Miyazaki et al. | |
| 2013/0151124 | A1 | 6/2013 | Seiberlich et al. | |
| 2013/0184961 | A1 | 7/2013 | Kumar et al. | |
| 2013/0213353 | A1 | 8/2013 | Rollinger et al. | |
| 2014/0076279 | A1 | 3/2014 | Livshiz et al. | |
| 2014/0174413 | A1 | 6/2014 | Huang et al. | |
| 2014/0174414 | A1 | 6/2014 | Huang et al. | |
| 2014/0311446 | A1 | 10/2014 | Whitney et al. | |
| 2014/0316681 | A1 | 10/2014 | Whitney et al. | |
| 2014/0316682 | A1 | 10/2014 | Whitney et al. | |
| 2014/0316683 | A1 | 10/2014 | Whitney et al. | |
| 2015/0039206 | A1 | 2/2015 | Storch et al. | |
| 2015/0275569 | A1 | 10/2015 | LeBlanc | |
| 2015/0275711 | A1 | 10/2015 | Whitney et al. | |
| 2015/0275771 | A1 | 10/2015 | Pochner et al. | |
| 2015/0275772 | A1 | 10/2015 | Long et al. | |
| 2015/0275783 | A1 | 10/2015 | Wong et al. | |
| 2015/0275784 | A1 | 10/2015 | Whitney et al. | |
| 2015/0275785 | A1 | 10/2015 | Cygan, Jr. et al. | |
| 2015/0275786 | A1 | 10/2015 | Jin et al. | |
| 2015/0275789 | A1 | 10/2015 | Cygan, Jr. et al. | |
| 2015/0275792 | A1 | 10/2015 | Genslak et al. | |
| 2015/0275794 | A1 | 10/2015 | Verdejo et al. | |

(56) **References Cited**

U.S. PATENT DOCUMENTS

| | | | |
|---|---|---|---|
| 2015/0275795 | A1 | 10/2015 | Cygan, Jr. et al. |
| 2015/0275796 | A1 | 10/2015 | Pochner et al. |
| 2015/0275806 | A1 | 10/2015 | Genslak et al. |

OTHER PUBLICATIONS

U.S. Appl. No. 14/675,860, filed Apr. 2001, Long et al.
John C. G. Boot; "Quadratic Programming: Algorithms, Anomalies, Applications Volume 2 of Studies in mathematical and managerial economics"; North-Holland Publ.Comp., 1964; 213 pages.
N. Lawrence Ricker; "Use of quadratic programming for constrained internal model control"; Ind. Eng. Chem. Process Des. Dev., 1985, pp. 925-936.
C. E. Lemke; "A Method of Solution for Quadratic Programs"; Rensselaer Polytechnic Institute, Troy, New York, Published Online: Jul. 1, 1962, pp. 442-453.
U.S. Appl. No. 14/309,047, filed Jun. 19, 2014, Jose C. Zavala Jurado et al.
U.S. Appl. No. 14/675,828, filed Apr. 1, 2001, Long et al.
U.S. Appl. No. 13/613,588, filed Sep. 13, 2012, Livshiz et al.
U.S. Appl. No. 13/686,069, filed Nov. 27, 2012, Livshiz et al.
U.S. Appl. No. 13/911,121, filed Jun. 6, 2013, Whitney et al.
U.S. Appl. No. 13/911,132, filed Jun. 6, 2013, Whitney et al.
U.S. Appl. No. 13/911,148, filed Jun. 6, 2013, Whitney et al.
U.S. Appl. No. 13/911,156, filed Jun. 6, 2013, Whitney et al.
U.S. Appl. No. 14/032,508, filed Sep. 20, 2013, Storch et al.
U.S. Appl. No. 14/225,496, filed Mar. 26, 2014, Pochner et al.
U.S. Appl. No. 14/225,502, filed Mar. 26, 2014, Long et al.
U.S. Appl. No. 14/225,507, filed Mar. 26, 2014, Jin et al.
U.S. Appl. No. 14/225,516, filed Mar. 26, 2014, Whitney et al.
U.S. Appl. No. 14/225,531, filed Mar. 26, 2014, Genslak et al.
U.S. Appl. No. 14/225,569, filed Mar. 26, 2014, Long et al.
U.S. Appl. No. 14/225,587, filed Mar. 26, 2014, Cygan Jr. et al.
U.S. Appl. No. 14/225,626, filed Mar. 26, 2014, Verdejo et al.
U.S. Appl. No. 14/225,808, filed Mar. 26, 2014, Whitney et al.
U.S. Appl. No. 14/225,818, filed Mar. 26, 2014, Cygan Jr. et al.
U.S. Appl. No. 14/225,891, filed Mar. 26, 2014, Genslak et al.
U.S. Appl. No. 14/225,896, filed Mar. 26, 2014, Cygan Jr. et al.
U.S. Appl. No. 14/226,006, filed Mar. 26, 2014, Pochner et al.
U.S. Appl. No. 14/226,121, filed Mar. 26, 2014, Wong et al.
U.S. Appl. No. 14/309,047, filed Jun. 19, 2014, Zavala Jurado et al.
U.S. Appl. No. 14/225,817, filed Mar. 26, 2014, Cygan Jr. et al.
U.S. Appl. No. 14/617,068, filed Feb. 9, 2015, Whitney et al.
U.S. Appl. No. 14/675,828, filed Apr. 1, 2015, Long et al.
U.S. Appl. No. 14/675,860, filed Apr. 1, 2015, Long et al.
U.S. Appl. No. 14/931,134, filed Nov. 3, 2015, Wong et al.
U.S. Appl. No. 13/613,683, filed Sep. 13, 2012, Livshiz et al.

* cited by examiner

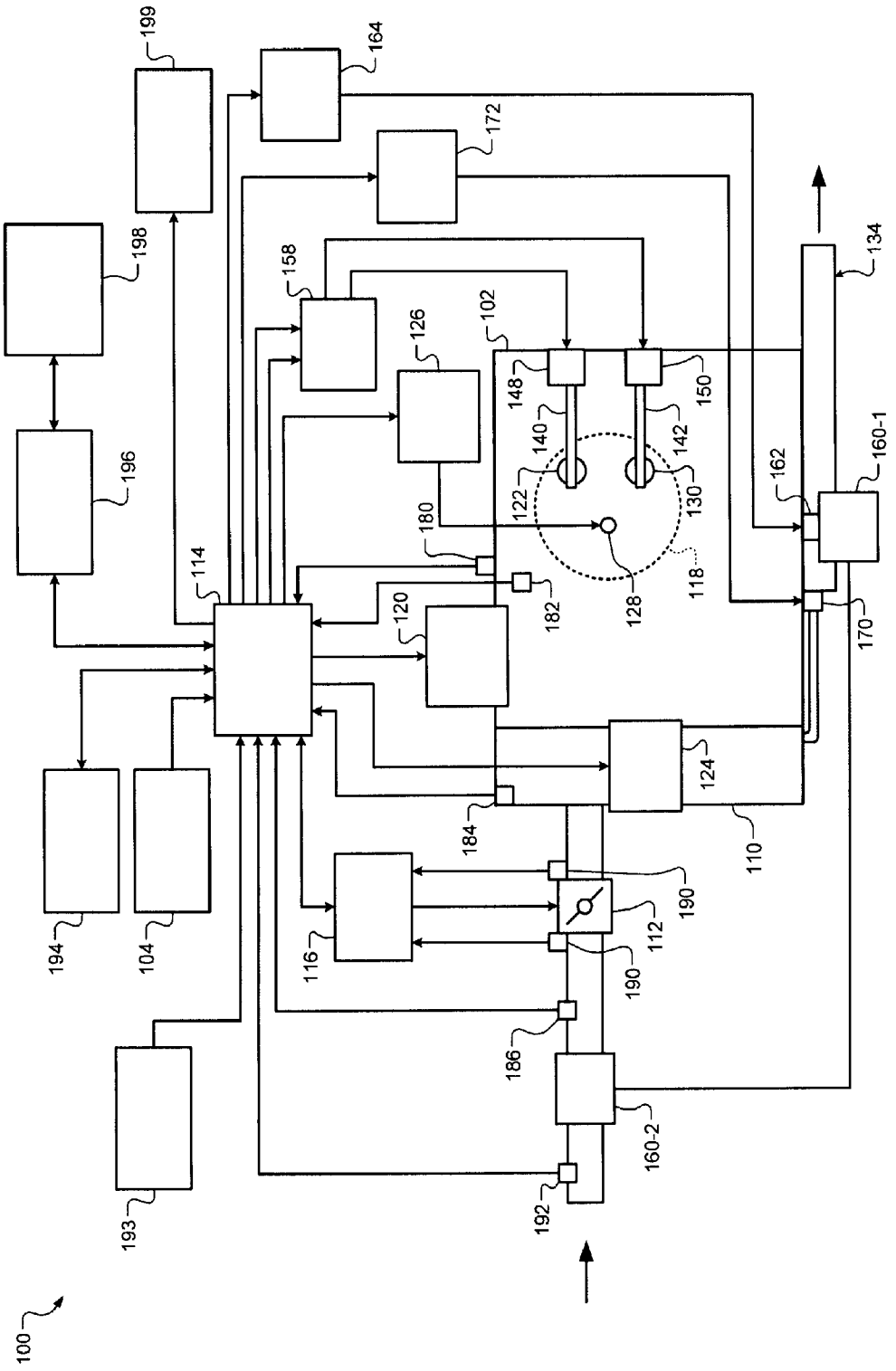
100
193
194
104
196
198
199
114
116
186
192
160-2
184
190
112
190
110
124
120
180
182
122
128
118
130
140
142
148
150
102
126
158
172
164
162
170
160-1
134

FIG. 1

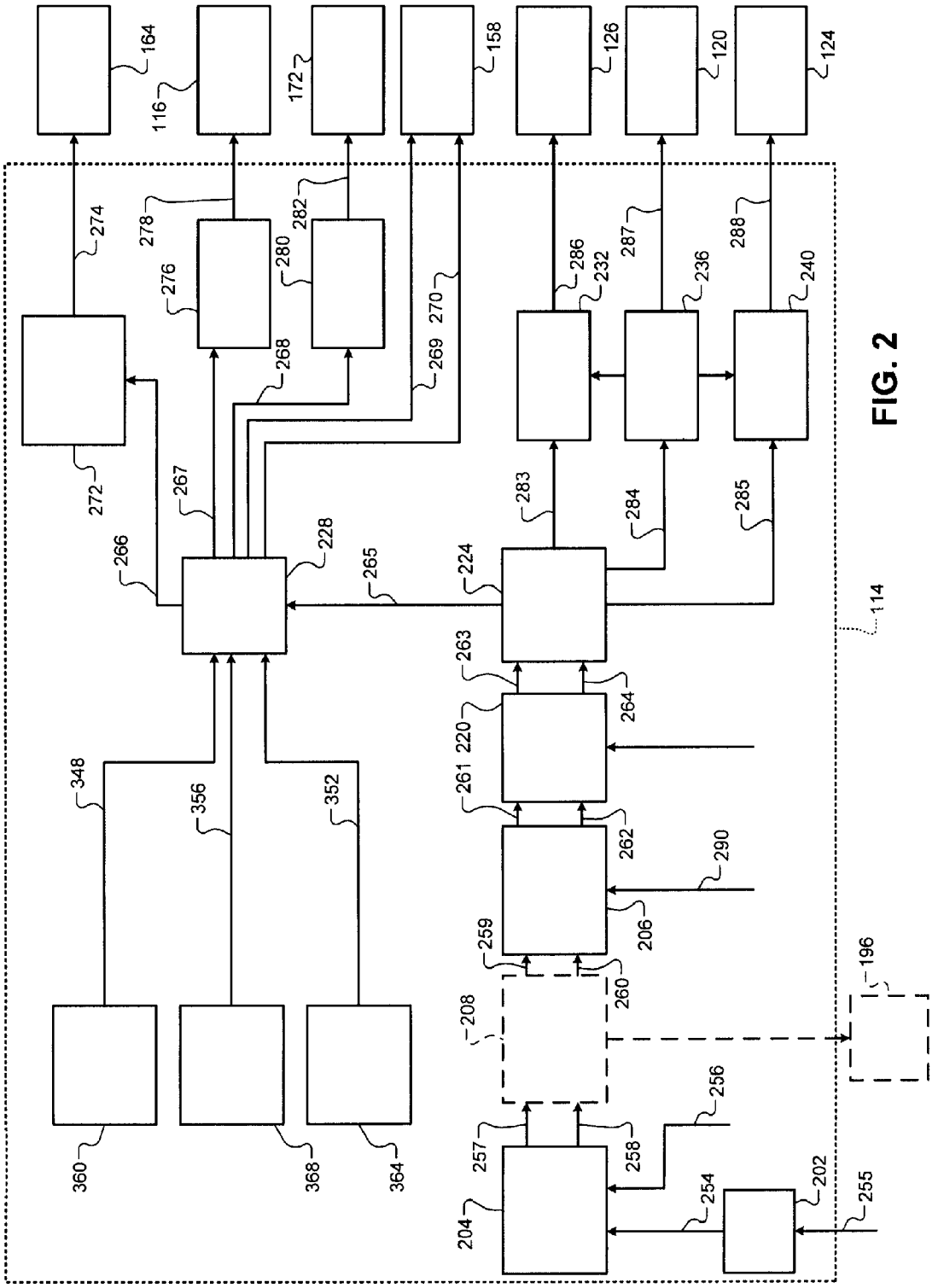
164
116
172
158
126
120
124
274
278
282
276
280
268
269
270
286
232
287
236
288
240
272
267
266
228
265
224
283
284
285
114
263
264
220
261
262
290
206
259
260
208
196
348
356
352
360
368
364
257
258
256
204
254
202
255

FIG. 2

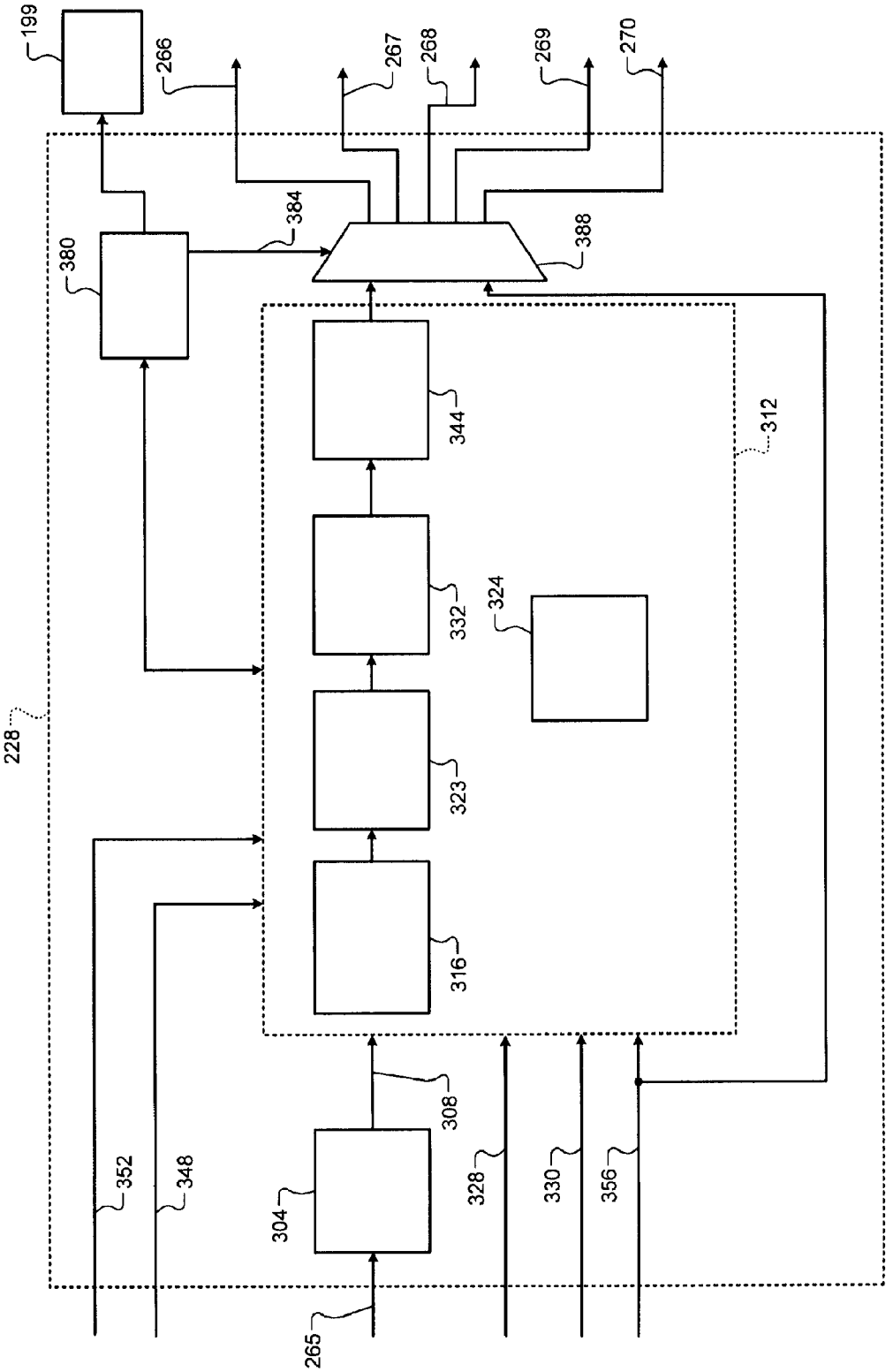
199
266
267
268
269
270
380
384
388
344
332
324
323
316
312
228
352
348
304
308
328
330
356
265

FIG. 3

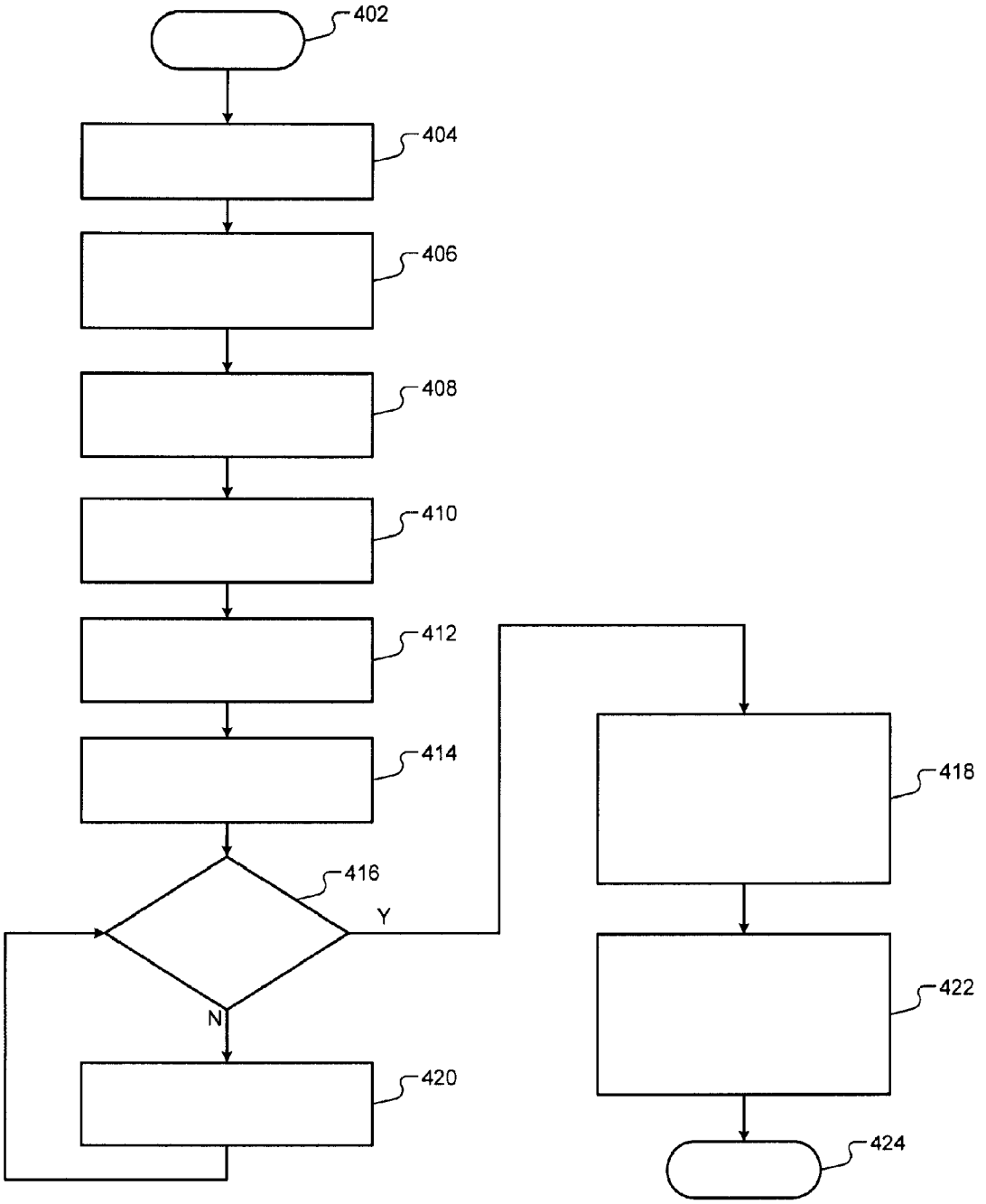


FIG. 4

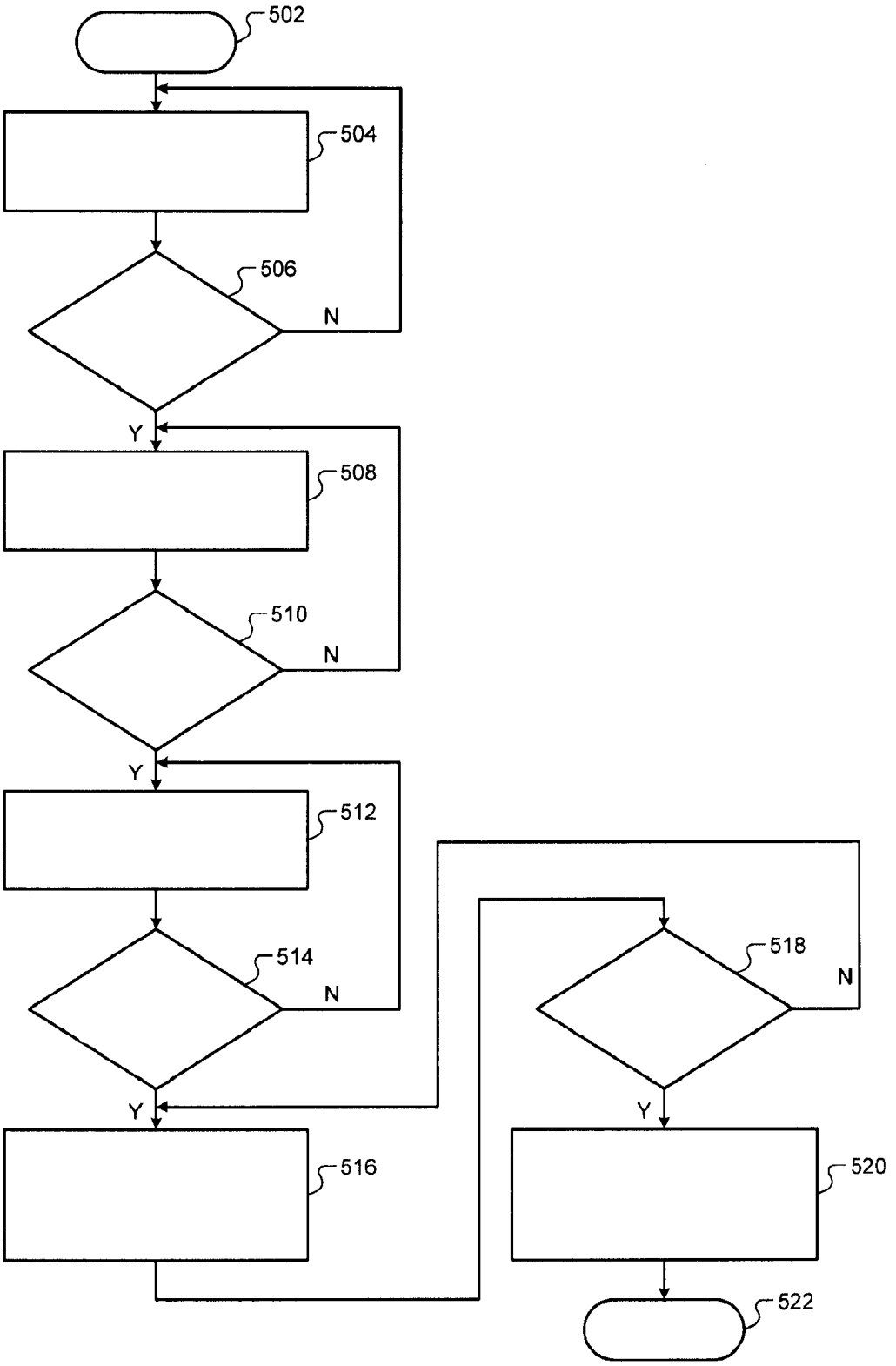


FIG. 5

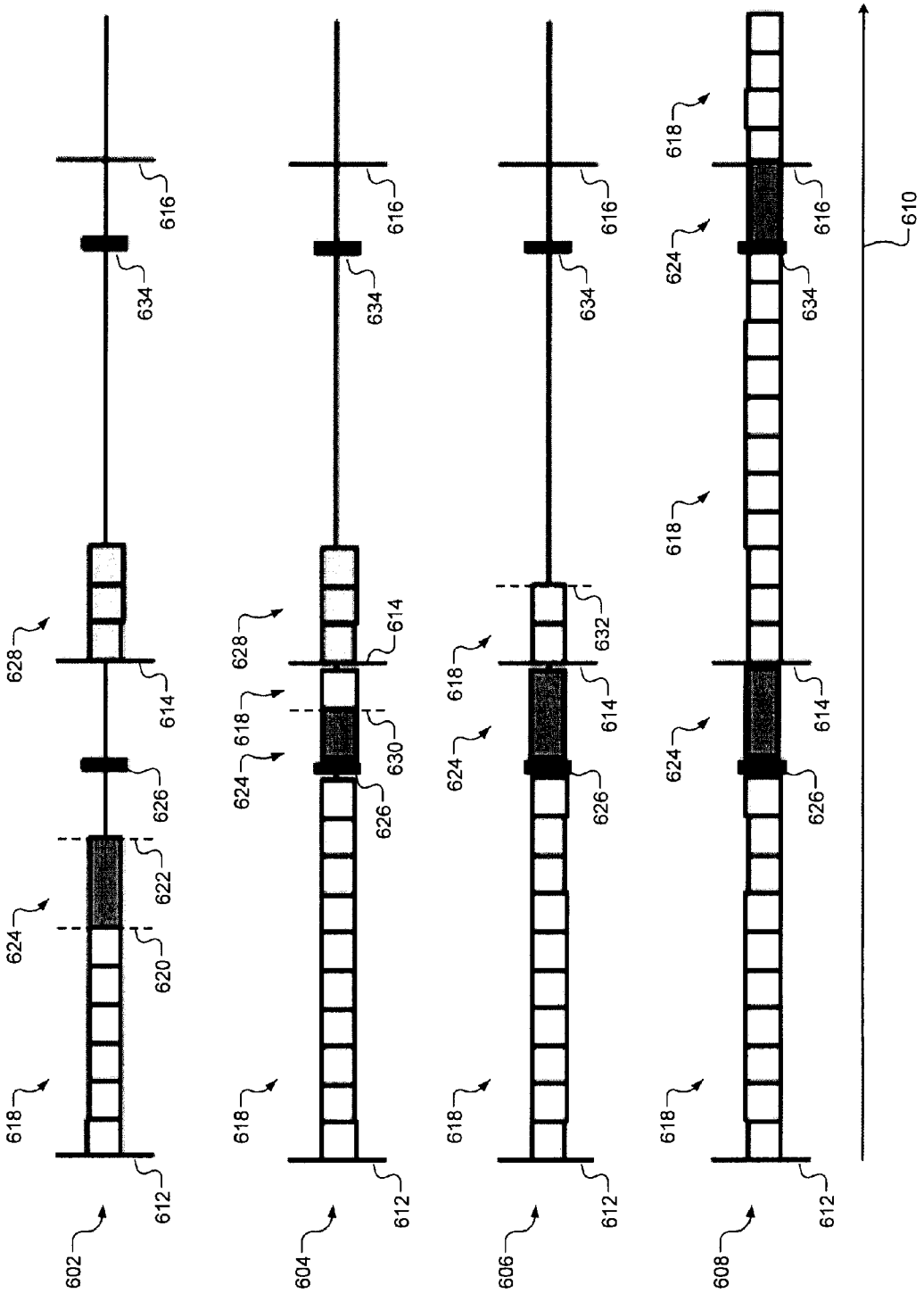
602
604
606
608
610
612
614
616
618
620
622
624
626
628
630
632
634

FIG. 6

# SYSTEM AND METHOD FOR MANAGING THE PERIOD OF A CONTROL LOOP FOR CONTROLLING AN ENGINE USING MODEL PREDICTIVE CONTROL

## CROSS-REFERENCE TO RELATED APPLICATIONS

This application is related to U.S. patent application Ser. No. 14/225,502 filed on Mar. 26, 2014, Ser. No. 14/225,516 filed on Mar. 26, 2014, Ser. No. 14/225,569 filed on Mar. 26, 2014, Ser. No. 14/225,626 filed on Mar. 26, 2014, Ser. No. 14/225,817 filed on Mar. 26, 2014, Ser. No. 14/225,896 filed on Mar. 26, 2014, Ser. No. 14/225,531 filed on Mar. 26, 2014, Ser. No. 14/225,507 filed on Mar. 26, 2014, Ser. No. 14/225,808 filed on Mar. 26, 2014, 14/225,587 filed on Mar. 26, 2014, Ser. No. 14/226,006 filed on Mar. 26, 2014, Ser. No. 14/226,121 filed on Mar. 26, 2014, Ser. No. 14/225,496 filed on Mar. 26, 2014, and Ser. No. 14/225,891 filed on Mar. 26, 2014. The entire disclosure of the above applications are incorporated herein by reference.

## FIELD

The present disclosure relates to internal combustion engines, and more particularly, to systems and methods for managing the period of a control loop for controlling an engine using model predictive control.

## BACKGROUND

The background description provided here is for the purpose of generally presenting the context of the disclosure. Work of the presently named inventors, to the extent it is described in this background section, as well as aspects of the description that may not otherwise qualify as prior art at the time of filing, are neither expressly nor impliedly admitted as prior art against the present disclosure.

Internal combustion engines combust an air and fuel mixture within cylinders to drive pistons, which produces drive torque. Air flow into the engine is regulated via a throttle. More specifically, the throttle adjusts throttle area, which increases or decreases air flow into the engine. As the throttle area increases, the air flow into the engine increases. A fuel control system adjusts the rate that fuel is injected to provide a desired air/fuel mixture to the cylinders and/or to achieve a desired torque output. Increasing the amount of air and fuel provided to the cylinders increases the torque output of the engine.

In spark-ignition engines, spark initiates combustion of an air/fuel mixture provided to the cylinders. In compression-ignition engines, compression in the cylinders combusts the air/fuel mixture provided to the cylinders. Spark timing and air flow may be the primary mechanisms for adjusting the torque output of spark-ignition engines, while fuel flow may be the primary mechanism for adjusting the torque output of compression-ignition engines.

Engine control systems have been developed to control engine output torque to achieve a desired torque. Traditional engine control systems, however, do not control the engine output torque as accurately as desired. Further, traditional engine control systems do not provide a rapid response to control signals or coordinate engine torque control among various devices that affect the engine output torque.

## SUMMARY

A system according to the present disclosure includes a model predictive control (MPC) module, an actuator module, and a remedial action module. The MPC module performs MPC tasks that include predicting operating parameters for a set of possible target values and determining a cost for the set of possible target values based on the predicted operating parameters. The MPC tasks also include selecting the set of possible target values from multiple sets of possible target values based on the cost and setting target values to the possible target values of the selected set. The actuator module controls an actuator of an engine based on at least one of the target values. The remedial action module selectively takes a remedial action based on at least one of an amount of time that elapses as the MPC tasks are performed and a number of iterations of the MPC tasks that are performed.

Further areas of applicability of the present disclosure will become apparent from the detailed description, the claims and the drawings. The detailed description and specific examples are intended for purposes of illustration only and are not intended to limit the scope of the disclosure.



## BRIEF DESCRIPTION OF THE DRAWINGS

The present disclosure will become more fully understood from the detailed description and the accompanying drawings, wherein:

FIG. **1** is a functional block diagram of an example engine system according to the present disclosure;

FIG. **2** is a functional block diagram of an example engine control system according to the present disclosure;

FIG. **3** is a functional block diagram of an example air control module according to the present disclosure;

FIG. **4** is a flowchart depicting an example method of controlling a throttle valve, intake and exhaust valve phasing, a wastegate, and an exhaust gas recirculation (EGR) valve using model predictive control according to the present disclosure;

FIG. **5** is a flowchart depicting an example method of managing a period of a control loop executed by a model predictive control module according to the present disclosure; and

FIG. **6** is a graph further illustrating the example method of FIG. **5**.

In the drawings, reference numbers may be reused to identify similar and/or identical elements.

## DETAILED DESCRIPTION

An engine control module (ECM) controls torque output of an engine. More specifically, the ECM controls actuators of the engine based on target values based on a requested amount of torque. For example, the ECM controls intake and exhaust camshaft phasing based on target intake and exhaust phaser angles, a throttle valve based on a target throttle opening, an exhaust gas recirculation (EGR) valve based on a target EGR opening, and a wastegate of a turbocharger based on a target wastegate duty cycle.

The ECM could determine the target values individually using multiple single input single output (SISO) controllers, such as proportional integral derivative (PID) controllers. However, when multiple SISO controllers are used, the target values may be set to maintain system stability at the expense of possible decreases in fuel consumption. Additionally, calibration and design of the individual SISO controllers may be costly and time consuming.

The ECM of the present disclosure generates the target values using a model predictive control (MPC) module. The MPC module identifies possible sets of target values based

on an engine torque request. The MPC module determines predicted parameters for each of the possible sets based on the possible sets' target values and a mathematical model of the engine.

The MPC module may also determine a cost associated with use of each of the possible sets. The cost determined for a possible set may increase as differences between the target values of the possible set and reference values increase and vice versa. The MPC module may select the possible set that has the lowest cost. Instead of or in addition to identifying possible sets of target values and determining the cost of each of the sets, the MPC module may generate a surface representing the cost of possible sets of target values. The MPC module may then identify the possible set that has the lowest cost based on the slope of the cost surface.

The MPC module may determine whether the predicted parameters of the selected set satisfy constraints. If so, the MPC module may set the target values based on the selected set. Otherwise, the MPC module may select the possible set having the next lowest cost and test that set for satisfaction of the constraints. The process of selecting a set and testing the set for satisfaction of the constraints may be referred to as an iteration. Multiple iterations may be performed during each control loop.

The ECM of the present disclosure may monitor the time that elapses as the MPC module performs iterations and take one or more remedial actions if the iteration time is greater than a threshold. In some instances, the period required to perform a single iteration may be known, in which case the ECM may monitor the number of iterations that are performed and multiply the number of iterations by the predetermined iteration period to obtain the iteration time. Iterations started during the current loop may be referred to as the current iterations and the time that elapses as the MPC module performs the current iterations may be referred to as the current iteration time. If the current iteration time extends into the period allotted for the next loop, the ECM may instruct the MPC module to set the target values for the current loop to the target values set for the last loop and to refrain from restarting iterations in the next loop.

In this manner, the ECM allows the MPC to complete the current iterations during the next loop. Allowing the MPC module to complete the current iterations during the next loop may reduce the amount of time required to complete iterations started during subsequent control loops. In addition, the loop rate of the MPC module may be decreased relative to a worst-case loop rate for the longest expected iteration time.

If the current iteration time exceeds the period allotted for the next control loop, the solution sought by the MPC module may be infeasible or there may be another error in the MPC module. Thus, the ECM may diagnose a fault in the MPC module. The ECM may also reset and reinitialize the MPC module, activate a service indicator such as a malfunction indicator lamp, and/or limit the torque output of the engine.

Referring now to FIG. **1**, a functional block diagram of an example engine system **100** is presented. The engine system **100** includes an engine **102** that combusts an air/fuel mixture to produce drive torque for a vehicle based on driver input from a driver input module **104**. The engine **102** may be a gasoline spark ignition internal combustion engine.

Air is drawn into an intake manifold **110** through a throttle valve **112**. For example only, the throttle valve **112** may include a butterfly valve having a rotatable blade. An engine control module (ECM) **114** controls a throttle actuator module **116**, which regulates opening of the throttle valve **112** to control the amount of air drawn into the intake manifold **110**.

Air from the intake manifold **110** is drawn into cylinders of the engine **102**. While the engine **102** may include multiple cylinders, for illustration purposes a single representative cylinder **118** is shown. For example only, the engine **102** may include 2, 3, 4, 5, 6, 8, 10, and/or 12 cylinders. The ECM **114** may instruct a cylinder actuator module **120** to selectively deactivate some of the cylinders, which may improve fuel economy under certain engine operating conditions.

The engine **102** may operate using a four-stroke cycle. The four strokes, described below, may be referred to as the intake stroke, the compression stroke, the combustion stroke, and the exhaust stroke. During each revolution of a crankshaft (not shown), two of the four strokes occur within the cylinder **118**. Therefore, two crankshaft revolutions are necessary for the cylinder **118** to experience all four of the strokes.

During the intake stroke, air from the intake manifold **110** is drawn into the cylinder **118** through an intake valve **122**. The ECM **114** controls a fuel actuator module **124**, which regulates fuel injection to achieve a target air/fuel ratio. Fuel may be injected into the intake manifold **110** at a central location or at multiple locations, such as near the intake valve **122** of each of the cylinders. In various implementations (not shown), fuel may be injected directly into the cylinders or into mixing chambers associated with the cylinders. The fuel actuator module **124** may halt injection of fuel to cylinders that are deactivated.

The injected fuel mixes with air and creates an air/fuel mixture in the cylinder **118**. During the compression stroke, a piston (not shown) within the cylinder **118** compresses the air/fuel mixture. A spark actuator module **126** energizes a spark plug **128** in the cylinder **118** based on a signal from the ECM **114**, which ignites the air/fuel mixture. The timing of the spark may be specified relative to the time when the piston is at its topmost position, referred to as top dead center (TDC).

The spark actuator module **126** may be controlled by a timing signal specifying how far before or after TDC to generate the spark. Because piston position is directly related to crankshaft rotation, operation of the spark actuator module **126** may be synchronized with crankshaft angle. Generating spark may be referred to as a firing event. The spark actuator module **126** may have the ability to vary the timing of the spark for each firing event. The spark actuator module **126** may vary the spark timing for a next firing event when the spark timing is changed between a last firing event and the next firing event. The spark actuator module **126** may halt provision of spark to deactivated cylinders.

During the combustion stroke, the combustion of the air/fuel mixture drives the piston away from TDC, thereby driving the crankshaft. The combustion stroke may be defined as the time between the piston reaching TDC and the time at which the piston reaches bottom dead center (BDC). During the exhaust stroke, the piston begins moving away from BDC and expels the byproducts of combustion through an exhaust valve **130**. The byproducts of combustion are exhausted from the vehicle via an exhaust system **134**.

The intake valve **122** may be controlled by an intake camshaft **140**, while the exhaust valve **130** may be controlled by an exhaust camshaft **142**. In various implementations, multiple intake camshafts (including the intake camshaft **140**) may control multiple intake valves (including the intake valve **122**) for the cylinder **118** and/or may control

the intake valves (including the intake valve **122**) of multiple banks of cylinders (including the cylinder **118**). Similarly, multiple exhaust camshafts (including the exhaust camshaft **142**) may control multiple exhaust valves for the cylinder **118** and/or may control exhaust valves (including the exhaust valve **130**) for multiple banks of cylinders (including the cylinder **118**). In various other implementations, the intake valve **122** and/or the exhaust valve **130** may be controlled by devices other than camshafts, such as camless valve actuators. The cylinder actuator module **120** may deactivate the cylinder **118** by disabling opening of the intake valve **122** and/or the exhaust valve **130**.

The time when the intake valve **122** is opened may be varied with respect to piston TDC by an intake cam phaser **148**. The time when the exhaust valve **130** is opened may be varied with respect to piston TDC by an exhaust cam phaser **150**. A phaser actuator module **158** may control the intake cam phaser **148** and the exhaust cam phaser **150** based on signals from the ECM **114**. When implemented, variable valve lift (not shown) may also be controlled by the phaser actuator module **158**.

The engine system **100** may include a turbocharger that includes a hot turbine **160-1** that is powered by hot exhaust gases flowing through the exhaust system **134**. The turbocharger also includes a cold air compressor **160-2** that is driven by the turbine **160-1**. The compressor **160-2** compresses air leading into the throttle valve **112**. In various implementations, a supercharger (not shown), driven by the crankshaft, may compress air from the throttle valve **112** and deliver the compressed air to the intake manifold **110**.

A wastegate **162** may allow exhaust to bypass the turbine **160-1**, thereby reducing the boost (the amount of intake air compression) provided by the turbocharger. A boost actuator module **164** may control the boost of the turbocharger by controlling opening of the wastegate **162**. In various implementations, two or more turbochargers may be implemented and may be controlled by the boost actuator module **164**.

An air cooler (not shown) may transfer heat from the compressed air charge to a cooling medium, such as engine coolant or air. An air cooler that cools the compressed air charge using engine coolant may be referred to as an intercooler. An air cooler that cools the compressed air charge using air may be referred to as a charge air cooler. The compressed air charge may receive heat, for example, via compression and/or from components of the exhaust system **134**. Although shown separated for purposes of illustration, the turbine **160-1** and the compressor **160-2** may be attached to each other, placing intake air in close proximity to hot exhaust.

The engine system **100** may include an exhaust gas recirculation (EGR) valve **170**, which selectively redirects exhaust gas back to the intake manifold **110**. The EGR valve **170** may be located upstream of the turbocharger's turbine **160-1**. The EGR valve **170** may be controlled by an EGR actuator module **172** based on signals from the ECM **114**.

A position of the crankshaft may be measured using a crankshaft position sensor **180**. A rotational speed of the crankshaft (an engine speed) may be determined based on the crankshaft position. A temperature of the engine coolant may be measured using an engine coolant temperature (ECT) sensor **182**. The ECT sensor **182** may be located within the engine **102** or at other locations where the coolant is circulated, such as a radiator (not shown).

A pressure within the intake manifold **110** may be measured using a manifold absolute pressure (MAP) sensor **184**. In various implementations, engine vacuum, which is the difference between ambient air pressure and the pressure within the intake manifold **110**, may be measured. A mass flow rate of air flowing into the intake manifold **110** may be measured using a mass air flow (MAF) sensor **186**. In various implementations, the MAF sensor **186** may be located in a housing that also includes the throttle valve **112**.

The throttle actuator module **116** may monitor the position of the throttle valve **112** using one or more throttle position sensors (TPS) **190**. An ambient temperature of air being drawn into the engine **102** may be measured using an intake air temperature (IAT) sensor **192**. The engine system **100** may also include one or more other sensors **193**, such as an ambient humidity sensor, one or more knock sensors, a compressor outlet pressure sensor and/or a throttle inlet pressure sensor, a wastegate position sensor, an EGR position sensor, and/or one or more other suitable sensors. The ECM **114** may use signals from the sensors to make control decisions for the engine system **100**.

The ECM **114** may communicate with a transmission control module **194** to coordinate shifting gears in a transmission (not shown). For example, the ECM **114** may reduce engine torque during a gear shift. The ECM **114** may communicate with a hybrid control module **196** to coordinate operation of the engine **102** and an electric motor **198**.

The electric motor **198** may also function as a generator, and may be used to produce electrical energy for use by vehicle electrical systems and/or for storage in a battery. In various implementations, various functions of the ECM **114**, the transmission control module **194**, and the hybrid control module **196** may be integrated into one or more modules.

Each system that varies an engine parameter may be referred to as an engine actuator. For example, the throttle actuator module **116** may adjust opening of the throttle valve **112** to achieve a target throttle opening area. The spark actuator module **126** controls the spark plugs to achieve a target spark timing relative to piston TDC. The fuel actuator module **124** controls the fuel injectors to achieve target fueling parameters. The phaser actuator module **158** may control the intake and exhaust cam phasers **148** and **150** to achieve target intake and exhaust cam phaser angles, respectively. The EGR actuator module **172** may control the EGR valve **170** to achieve a target EGR opening area. The boost actuator module **164** controls the wastegate **162** to achieve a target wastegate opening area. The cylinder actuator module **120** controls cylinder deactivation to achieve a target number of activated or deactivated cylinders.

The ECM **114** generates the target values for the engine actuators to cause the engine **102** to generate a target engine output torque. The ECM **114** generates the target values for the engine actuators using model predictive control (MPC), as discussed further below. The ECM **114** also monitors the time elapsed while generating the target values and takes a remedial action and/diagnoses a fault when the elapsed time is greater than a predetermined period. The ECM **114** may set a diagnostic trouble code (DTC) and/or activate a service indicator **199** when a fault is diagnosed. The service indicator **199** indicates that service is required using a visual message (e.g., text), an audible message (e.g., chime), and/or a tactile message (e.g., vibration).

Referring now to FIG. **2**, a functional block diagram of an example engine control system is presented. An example implementation of the ECM **114** includes a driver torque module **202**, an axle torque arbitration module **204**, and a propulsion torque arbitration module **206**. The ECM **114** may include a hybrid optimization module **208**. The ECM **114** also includes a reserves/loads module **220**, a torque

requesting module **224**, an air control module **228**, a spark control module **232**, a cylinder control module **236**, and a fuel control module **240**.

The driver torque module **202** may determine a driver torque request **254** based on a driver input **255** from the driver input module **104**. The driver input **255** may be based on, for example, a position of an accelerator pedal and a position of a brake pedal. The driver input **255** may also be based on cruise control, which may be an adaptive cruise control system that varies vehicle speed to maintain a predetermined following distance. The driver torque module **202** may store one or more mappings of accelerator pedal position to target torque and may determine the driver torque request **254** based on a selected one of the mappings.

An axle torque arbitration module **204** arbitrates between the driver torque request **254** and other axle torque requests **256**. Axle torque (torque at the wheels) may be produced by various sources including an engine and/or an electric motor. For example, the axle torque requests **256** may include a torque reduction requested by a traction control system when positive wheel slip is detected. Positive wheel slip occurs when axle torque overcomes friction between the wheels and the road surface, and the wheels begin to slip against the road surface. The axle torque requests **256** may also include a torque increase request to counteract negative wheel slip, where a tire of the vehicle slips in the other direction with respect to the road surface because the axle torque is negative.

The axle torque requests **256** may also include brake management requests and vehicle over-speed torque requests. Brake management requests may reduce axle torque to ensure that the axle torque does not exceed the ability of the brakes to hold the vehicle when the vehicle is stopped. Vehicle over-speed torque requests may reduce the axle torque to prevent the vehicle from exceeding a predetermined speed. The axle torque requests **256** may also be generated by vehicle stability control systems.

The axle torque arbitration module **204** outputs a predicted torque request **257** and an immediate torque request **258** based on the results of arbitrating between the received torque requests **254** and **256**. As described below, the predicted and immediate torque requests **257** and **258** from the axle torque arbitration module **204** may selectively be adjusted by other modules of the ECM **114** before being used to control the engine actuators.

In general terms, the immediate torque request **258** may be an amount of currently desired axle torque, while the predicted torque request **257** may be an amount of axle torque that may be needed on short notice. The ECM **114** controls the engine system **100** to produce an axle torque equal to the immediate torque request **258**. However, different combinations of target values may result in the same axle torque. The ECM **114** may therefore adjust the target values to enable a faster transition to the predicted torque request **257**, while still maintaining the axle torque at the immediate torque request **258**.

In various implementations, the predicted torque request **257** may be set based on the driver torque request **254**. The immediate torque request **258** may be set to less than the predicted torque request **257** under some circumstances, such as when the driver torque request **254** is causing wheel slip on an icy surface. In such a case, a traction control system (not shown) may request a reduction via the immediate torque request **258**, and the ECM **114** reduces the engine torque output to the immediate torque request **258**. However, the ECM **114** performs the reduction so the engine system **100** can quickly resume producing the predicted torque request **257** once the wheel slip stops.

In general terms, the difference between the immediate torque request **258** and the (generally higher) predicted torque request **257** can be referred to as a torque reserve. The torque reserve may represent the amount of additional torque (above the immediate torque request **258**) that the engine system **100** can begin to produce with minimal delay. Fast engine actuators are used to increase or decrease current axle torque with minimal delay. Fast engine actuators are defined in contrast with slow engine actuators.

In general terms, fast engine actuators can change the axle torque more quickly than slow engine actuators. Slow actuators may respond more slowly to changes in their respective target values than fast actuators do. For example, a slow actuator may include mechanical components that require time to move from one position to another in response to a change in target value. A slow actuator may also be characterized by the amount of time it takes for the axle torque to begin to change once the slow actuator begins to implement the changed target value. Generally, this amount of time will be longer for slow actuators than for fast actuators. In addition, even after beginning to change, the axle torque may take longer to fully respond to a change in a slow actuator.

For example only, the spark actuator module **126** may be a fast actuator. Spark-ignition engines may combust fuels including, for example, gasoline and ethanol, by applying a spark. By way of contrast, the throttle actuator module **116** may be a slow actuator.

For example, as described above, the spark actuator module **126** can vary the spark timing for a next firing event when the spark timing is changed between a last firing event and the next firing event. By way of contrast, changes in throttle opening take longer to affect engine output torque. The throttle actuator module **116** changes the throttle opening by adjusting the angle of the blade of the throttle valve **112**. Therefore, when the target value for opening of the throttle valve **112** is changed, there is a mechanical delay as the throttle valve **112** moves from its previous position to a new position in response to the change. In addition, air flow changes based on the throttle opening are subject to air transport delays in the intake manifold **110**. Further, increased air flow in the intake manifold **110** is not realized as an increase in engine output torque until the cylinder **118** receives additional air in the next intake stroke, compresses the additional air, and commences the combustion stroke.

Using these actuators as an example, a torque reserve can be created by setting the throttle opening to a value that would allow the engine **102** to produce the predicted torque request **257**. Meanwhile, the spark timing can be set based on the immediate torque request **258**, which is less than the predicted torque request **257**. Although the throttle opening generates enough air flow for the engine **102** to produce the predicted torque request **257**, the spark timing is retarded (which reduces torque) based on the immediate torque request **258**. The engine output torque will therefore be equal to the immediate torque request **258**.

When additional torque is needed, the spark timing can be set based on the predicted torque request **257** or a torque between the predicted and immediate torque requests **257** and **258**. By the following firing event, the spark actuator module **126** may return the spark timing to an optimum value, which allows the engine **102** to produce the full engine output torque achievable with the air flow already present. The engine output torque may therefore be quickly

increased to the predicted torque request **257** without experiencing delays from changing the throttle opening.

The axle torque arbitration module **204** may output the predicted torque request **257** and the immediate torque request **258** to a propulsion torque arbitration module **206**. In various implementations, the axle torque arbitration module **204** may output the predicted and immediate torque requests **257** and **258** to the hybrid optimization module **208**.

The hybrid optimization module **208** may determine how much torque should be produced by the engine **102** and how much torque should be produced by the electric motor **198**. The hybrid optimization module **208** then outputs modified predicted and immediate torque requests **259** and **260**, respectively, to the propulsion torque arbitration module **206**. In various implementations, the hybrid optimization module **208** may be implemented in the hybrid control module **196**.

The predicted and immediate torque requests received by the propulsion torque arbitration module **206** are converted from an axle torque domain (torque at the wheels) into a propulsion torque domain (torque at the crankshaft). This conversion may occur before, after, as part of, or in place of the hybrid optimization module **208**.

The propulsion torque arbitration module **206** arbitrates between propulsion torque requests **290**, including the converted predicted and immediate torque requests. The propulsion torque arbitration module **206** generates an arbitrated predicted torque request **261** and an arbitrated immediate torque request **262**. The arbitrated torque requests **261** and **262** may be generated by selecting a winning request from among received torque requests. Alternatively or additionally, the arbitrated torque requests may be generated by modifying one of the received requests based on another one or more of the received torque requests.

For example, the propulsion torque requests **290** may include torque reductions for engine over-speed protection, torque increases for stall prevention, and torque reductions requested by the transmission control module **194** to accommodate gear shifts. The propulsion torque requests **290** may also result from clutch fuel cutoff, which reduces the engine output torque when the driver depresses the clutch pedal in a manual transmission vehicle to prevent a flare in engine speed.

The propulsion torque requests **290** may also include an engine shutoff request, which may be initiated when a critical fault is detected. For example only, critical faults may include detection of vehicle theft, a stuck starter motor, electronic throttle control problems, and unexpected torque increases. In various implementations, when an engine shutoff request is present, arbitration selects the engine shutoff request as the winning request. When the engine shutoff request is present, the propulsion torque arbitration module **206** may output zero as the arbitrated predicted and immediate torque requests **261** and **262**.

In various implementations, an engine shutoff request may simply shut down the engine **102** separately from the arbitration process. The propulsion torque arbitration module **206** may still receive the engine shutoff request so that, for example, appropriate data can be fed back to other torque requestors. For example, all other torque requestors may be informed that they have lost arbitration.

The reserves/loads module **220** receives the arbitrated predicted and immediate torque requests **261** and **262**. The reserves/loads module **220** may adjust the arbitrated predicted and immediate torque requests **261** and **262** to create a torque reserve and/or to compensate for one or more loads. The reserves/loads module **220** then outputs adjusted predicted and immediate torque requests **263** and **264** to the torque requesting module **224**.

For example only, a catalyst light-off process or a cold start emissions reduction process may require retarded spark timing. The reserves/loads module **220** may therefore increase the adjusted predicted torque request **263** above the adjusted immediate torque request **264** to create retarded spark for the cold start emissions reduction process. In another example, the air/fuel ratio of the engine and/or the mass air flow may be directly varied, such as by diagnostic intrusive equivalence ratio testing and/or new engine purging. Before beginning these processes, a torque reserve may be created or increased to quickly offset decreases in engine output torque that result from leaning the air/fuel mixture during these processes.

The reserves/loads module **220** may also create or increase a torque reserve in anticipation of a future load, such as power steering pump operation or engagement of an air conditioning (A/C) compressor clutch. The reserve for engagement of the A/C compressor clutch may be created when the driver first requests air conditioning. The reserves/loads module **220** may increase the adjusted predicted torque request **263** while leaving the adjusted immediate torque request **264** unchanged to produce the torque reserve. Then, when the A/C compressor clutch engages, the reserves/loads module **220** may increase the adjusted immediate torque request **264** by the estimated load of the A/C compressor clutch.

The torque requesting module **224** receives the adjusted predicted and immediate torque requests **263** and **264**. The torque requesting module **224** determines how the adjusted predicted and immediate torque requests **263** and **264** will be achieved. The torque requesting module **224** may be engine type specific. For example, the torque requesting module **224** may be implemented differently or use different control schemes for spark-ignition engines versus compression-ignition engines.

In various implementations, the torque requesting module **224** may define a boundary between modules that are common across all engine types and modules that are engine type specific. For example, engine types may include spark-ignition and compression-ignition. Modules prior to the torque requesting module **224**, such as the propulsion torque arbitration module **206**, may be common across engine types, while the torque requesting module **224** and subsequent modules may be engine type specific.

The torque requesting module **224** determines an air torque request **265** based on the adjusted predicted and immediate torque requests **263** and **264**. The air torque request **265** may be a brake torque. Brake torque may refer to torque at the crankshaft under the current operating conditions.

Target values for airflow controlling engine actuators are determined based on the air torque request **265**. More specifically, based on the air torque request **265**, the air control module **228** determines a target wastegate opening area **266**, a target throttle opening area **267**, a target EGR opening area **268**, a target intake cam phaser angle **269**, and a target exhaust cam phaser angle **270**. The air control module **228** determines the target wastegate opening area **266**, the target throttle opening area **267**, the target EGR opening area **268**, the target intake cam phaser angle **269**, and the target exhaust cam phaser angle **270** using model predictive control, as discussed further below.

The boost actuator module **164** controls the wastegate **162** to achieve the target wastegate opening area **266**. For

example, a first conversion module **272** may convert the target wastegate opening area **266** into a target duty cycle **274** to be applied to the wastegate **162**, and the boost actuator module **164** may apply a signal to the wastegate **162** based on the target duty cycle **274**. In various implementations, the first conversion module **272** may convert the target wastegate opening area **266** into a target wastegate position (not shown), and convert the target wastegate position into the target duty cycle **274**.

The throttle actuator module **116** controls the throttle valve **112** to achieve the target throttle opening area **267**. For example, a second conversion module **276** may convert the target throttle opening area **267** into a target duty cycle **278** to be applied to the throttle valve **112**, and the throttle actuator module **116** may apply a signal to the throttle valve **112** based on the target duty cycle **278**. In various implementations, the second conversion module **276** may convert the target throttle opening area **267** into a target throttle position (not shown), and convert the target throttle position into the target duty cycle **278**.

The EGR actuator module **172** controls the EGR valve **170** to achieve the target EGR opening area **268**. For example, a third conversion module **280** may convert the target EGR opening area **268** into a target duty cycle **282** to be applied to the EGR valve **170**, and the EGR actuator module **172** may apply a signal to the EGR valve **170** based on the target duty cycle **282**. In various implementations, the third conversion module **280** may convert the target EGR opening area **268** into a target EGR position (not shown), and convert the target EGR position into the target duty cycle **282**.

The phaser actuator module **158** controls the intake cam phaser **148** to achieve the target intake cam phaser angle **269**. The phaser actuator module **158** also controls the exhaust cam phaser **150** to achieve the target exhaust cam phaser angle **270**. In various implementations, a fourth conversion module (not shown) may be included and may convert the target intake and exhaust cam phaser angles into target intake and exhaust duty cycles, respectively. The phaser actuator module **158** may apply the target intake and exhaust duty cycles to the intake and exhaust cam phasers **148** and **150**, respectively. In various implementations, the air control module **228** may determine a target overlap factor and a target effective displacement, and the phaser actuator module **158** may control the intake and exhaust cam phasers **148** and **150** to achieve the target overlap factor and the target effective displacement.

The torque requesting module **224** may also generate a spark torque request **283**, a cylinder shut-off torque request **284**, and a fuel torque request **285** based on the predicted and immediate torque requests **263** and **264**. The spark control module **232** may determine how much to retard the spark timing (which reduces engine output torque) from an optimum spark timing based on the spark torque request **283**. For example only, a torque relationship may be inverted to solve for a target spark timing **286**. For a given torque request. ($T_{Req}$), the target spark timing ($S_T$) **286** may be determined based on:

$$S_T = f^{-1}(T_{Req}, \text{APC}, I, E, \text{AF}, \text{OT}, \#), \quad (1)$$

where APC is an APC, I is an intake valve phasing value, E is an exhaust valve phasing value, AF is an air/fuel ratio, OT is an oil temperature, and # is a number of activated cylinders. This relationship may be embodied as an equation and/or as a lookup table. The air/fuel ratio (AF) may be the actual air/fuel ratio, as reported by the fuel control module **240**.

When the spark timing is set to the optimum spark timing, the resulting torque may be as close to a maximum best torque (MBT) as possible. MBT refers to the maximum engine output torque that is generated for a given air flow as spark timing is advanced, while using fuel having an octane rating greater than a predetermined octane rating and using stoichiometric fueling. The spark timing at which this maximum torque occurs is referred to as an MBT spark timing. The optimum spark timing may differ slightly from MBT spark timing because of, for example, fuel quality (such as when lower octane fuel is used) and environmental factors, such as ambient humidity and temperature. The engine output torque at the optimum spark timing may therefore be less than MBT. For example only, a table of optimum spark timings corresponding to different engine operating conditions may be determined during a calibration phase of vehicle design, and the optimum value is determined from the table based on current engine operating conditions.

The cylinder shut-off torque request **284** may be used by the cylinder control module **236** to determine a target number of cylinders to deactivate **287**. In various implementations, a target number of cylinders to activate may be used. The cylinder actuator module **120** selectively activates and deactivates the valves of cylinders based on the target number **287**.

The cylinder control module **236** may also instruct the fuel control module **240** to stop providing fuel for deactivated cylinders and may instruct the spark control module **232** to stop providing spark for deactivated cylinders. The spark control module **232** may stop providing spark to a cylinder once an fuel/air mixture that is already present in the cylinder has been combusted.

The fuel control module **240** may vary the amount of fuel provided to each cylinder based on the fuel torque request **285**. More specifically, the fuel control module **240** may generate target fueling parameters **288** based on the fuel torque request **285**. The target fueling parameters **288** may include, for example, target mass of fuel, target injection starting timing, and target number of fuel injections.

During normal operation, the fuel control module **240** may operate in an air lead mode in which the fuel control module **240** attempts to maintain a stoichiometric air/fuel ratio by controlling fueling based on air flow. For example, the fuel control module **240** may determine a target fuel mass that will yield stoichiometric combustion when combined with a present mass of air per cylinder (APC).

FIG. **3** is a functional block diagram of an example implementation of the air control module **228**. Referring now to FIGS. **2** and **3**, as discussed above, the air torque request **265** may be a brake torque. A torque conversion module **304** converts the air torque request **265** from brake torque into base torque. The torque request resulting from conversion into base torque will be referred to as a base air torque request **308**.

Base torques may refer to torque at the crankshaft made during operation of the engine **102** on a dynamometer while the engine **102** is warm and no torque loads are imposed on the engine **102** by accessories, such as an alternator and the A/C compressor. The torque conversion module **304** may convert the air torque request **265** into the base air torque request **308**, for example, using a mapping or a function that relates brake torques to base torques. In various implementations, the torque conversion module **304** may convert the air torque request **265** into another suitable type of torque, such as an indicated torque. An indicated torque may refer to a torque at the crankshaft attributable to work produced via combustion within the cylinders.

An MPC module **312** generates the target values **266-270** using MPC (Model Predictive Control). The MPC module **312** may be a single module or comprise multiple modules. For example, the MPC module **312** may include a sequence determination module **316**. The sequence determination module **316** determines possible sequences of the target values **266-270** that could be used together during N future control loops. Each of the possible sequences identified by the sequence determination module **316** includes one sequence of N values for each of the target values **266-270**. In other words, each possible sequence includes a sequence of N values for the target wastegate opening area **266**, a sequence of N values for the target throttle opening area **267**, a sequence of N values for the target EGR opening area **268**, a sequence of N values for the target intake cam phaser angle **269**, and a sequence of N values for the target exhaust cam phaser angle **270**. Each of the N values are for a corresponding one of the N future control loops. N is an integer greater than or equal to one.

A prediction module **323** determines predicted responses of the engine **102** to the possible sequences of the target values **266-270**, respectively, based on a mathematical model **324** of the engine **102**, exogenous inputs **328**, and feedback inputs **330**. More specifically, based on a possible sequence of the target values **266-270**, the exogenous inputs **328**, and the feedback inputs **330**, using the model **324**, the prediction module **323** generates a sequence of predicted torques of the engine **102** for the N control loops, a sequence of predicted APCs for the N control loops, a sequence of predicted amounts of external dilution for the N control loops, a sequence of predicted amounts of residual dilution for the N control loops, a sequence of predicted combustion phasing values for the N control loops, and a sequence of predicted combustion quality values for the N control loops. While an example of generating predicted torque, predicted APC, predicted external dilution, predicted residual dilution, predicted combustion phasing, and predicted combustion quality is described, the predicted parameters may include one or more other predicted engine operating parameters.

The model **324** may include, for example, a function or a mapping calibrated based on characteristics of the engine **102**. Dilution may refer to an amount of exhaust from a prior combustion event trapped within a cylinder for a combustion event. External dilution may refer to exhaust provided for a combustion event via the EGR valve **170**. Residual dilution may refer to exhaust that remains in a cylinder and/or exhaust that is pushed back into the cylinder following the exhaust stroke of a combustion cycle. Residual dilution may also be referred to as internal dilution.

Combustion phasing may refer to a crankshaft position where a predetermined amount of fuel injected is combusted within a cylinder relative to a predetermined crankshaft position for combustion of the predetermined amount of injected fuel. For example, combustion phasing may be expressed in terms of CA50 relative to a predetermined CA50. CA50 may refer to a crankshaft angle (CA) where 50 percent of a mass of injected fuel has been combusted within a cylinder. The predetermined CA50 may correspond to a CA50 where a maximum amount of work is produced from the fuel injected and may be approximately 8.5-approximately 10 degrees after TDC (top dead center) in various implementations. While combustion phasing will be discussed in terms of CA50 values, another suitable parameter indicative of combustion phasing may be used. Additionally, while combustion quality will be discussed as coefficient of variation (COV) of indicated mean effective pressure (IMEP) values, another suitable parameter indicative of combustion quality may be used.

The exogenous inputs **328** may include parameters that are not directly affected by the throttle valve **112**, the EGR valve **170**, the turbocharger, the intake cam phaser **148**, and the exhaust cam phaser **150**. For example, the exogenous inputs **328** may include engine speed, turbocharger inlet air pressure, IAT, and/or one or more other parameters. The feedback inputs **330** may include, for example, an estimated torque output of the engine **102**, an exhaust pressure downstream of the turbine **160-1** of the turbocharger, the IAT, an APC of the engine **102**, an estimated residual dilution, an estimated external dilution, and/or one or more other suitable parameters. The feedback inputs **330** may be measured using sensors (e.g., the IAT) and/or estimated based on one or more other parameters.

A cost module **332** determines a cost value for each of the possible sequences of the target values **266-270** based on the predicted parameters determined for a possible sequence and reference values **356**. An example cost determination is discussed further below.

A selection module **344** selects one of the possible sequences of the target values **266-270** based on the costs of the possible sequences, respectively. For example, the selection module **344** may select the one of the possible sequences having the lowest cost while satisfying actuator constraints **348** and output constraints **352**.

In various implementations, satisfaction of the actuator constraints **348** and the output constraints may be considered in the cost determination. In other words, the cost module **332** may determine the cost values further based on the actuator constraints **348** and the output constraints **352**. As discussed further below, based on how the cost values are determined, the selection module **344** will select the one of the possible sequences that best achieves the base air torque request **308** while minimizing fuel consumption, subject to the actuator constraints **348** and the output constraints **352**.

The selection module **344** may set the target values **266-270** to the first ones of the N values of the selected possible sequence, respectively. In other words, the selection module **344** may set the target wastegate opening area **266** to the first one of the N values in the sequence of N values for the target wastegate opening area **266**, set the target throttle opening area **267** to the first one of the N values in the sequence of N values for the target throttle opening area **267**, set the target EGR opening area **268** to the first one of the N values in the sequence of N values for the target EGR opening area **268**, set the target intake cam phaser angle **269** to the first one of the N values in the sequence of N values for the target intake cam phaser angle **269**, and set the target exhaust cam phaser angle **270** to the first one of the N values in the sequence of N values for the target exhaust cam phaser angle **270**.

During a next control loop, the MPC module **312** identifies possible sequences, generates the predicted parameters for the possible sequences, determines the cost of each of the possible sequences, selects of one of the possible sequences, and sets of the target values **266-270** to the first set of the target values **266-270** in the selected possible sequence. This process continues for each control loop.

An actuator constraint module **360** (see FIG. **2**) sets the actuator constraints **348** for each of the target values **266-270**. In other words, the actuator constraint module **360** sets actuator constraints for the throttle valve **112**, actuator constraints for the EGR valve **170**, actuator constraints for

the wastegate **162**, actuator constraints for the intake cam phaser **148**, and actuator constraints for the exhaust cam phaser **150**.

The actuator constraints **348** for each one of the target values **266-270** may include a maximum value for an associated target value and a minimum value for that target value. In addition, the actuator constraints **248** may include a rate of change constraint for an associated target value. The actuator constraint module **360** may generally set the actuator constraints **348** to predetermined operational ranges for the associated actuators. More specifically, the actuator constraint module **360** may generally set the actuator constraints **348** to predetermined operational ranges for the throttle valve **112**, the EGR valve **170**, the wastegate **162**, the intake cam phaser **148**, and the exhaust cam phaser **150**, respectively.

However, the actuator constraint module **360** may selectively adjust one or more of the actuator constraints **348** under some circumstances. For example, the actuator constraint module **360** may adjust the actuator constraints for a given actuator to narrow the operational range for that engine actuator when a fault is diagnosed in that engine actuator. For another example only, the actuator constraint module **360** may adjust the actuator constraints such that the target value for a given actuator follows a predetermined schedule over time or changes by a predetermined amount, for example, for a fault diagnostic, such as a cam phaser fault diagnostic, a throttle diagnostic, an EGR diagnostic, etc. For a target value to follow a predetermined schedule over time or to change by a predetermined amount, the actuator constraint module **360** may set the minimum and maximum values to the same value. The minimum and maximum values being set to the same value may force the corresponding target value to be set to the same value as the minimum and maximum values. The actuator constraint module **360** may vary the same value to which the minimum and maximum values are set over time to cause the target value to follow a predetermined schedule.

An output constraint module **364** (see FIG. **2**) sets the output constraints **352** for the predicted torque output of the engine **102**, the predicted CA50, the predicted COV of IMEP, the predicted residual dilution, and the predicted external dilution. The output constraints **352** for each one of the predicted values may include a maximum value for an associated predicted parameter and a minimum value for that predicted parameter. For example, the output constraints **352** may include a minimum torque, a maximum torque, a minimum CA50 and a maximum CA50, a minimum COV of IMEP and a maximum COV of IMEP, a minimum residual dilution and a maximum residual dilution, and a minimum external dilution and a maximum external dilution.

The output constraint module **364** may generally set the output constraints **352** to predetermined ranges for the associated predicted parameters, respectively. However, the output constraint module **364** may vary one or more of the output constraints **352** under some circumstances. For example, the output constraint module **364** may retard the maximum CA50, such as when knock occurs within the engine **102**. For another example, the output constraint module **364** may increase the maximum COV of IMEP under low load conditions, such as during engine idling where the a higher COV of IMEP may be needed to achieve a given torque request.

A reference module **368** (see FIG. **2**) generates the reference values **356** for the target values **266-270**, respectively. The reference values **356** include a reference for each of the target values **266-270**. In other words, the reference values **356** include a reference wastegate opening area, a reference throttle opening area, a reference EGR opening area, a reference intake cam phaser angle, and a reference exhaust cam phaser angle.

The reference module **368** may determine the reference values **356**, for example, based on the air torque request **265** and/or the base air torque request **308**. The reference values **356** provide references for setting the target values **266-270**, respectively. The reference values **356** may be used to determine the cost values for possible sequences, as discussed further below. The reference values **356** may also be used for one or more other reasons, such as by the sequence determination module **316** to determine possible sequences.

Instead of or in addition to generating sequences of possible target values and determining the cost of each of the sequences, the MPC module **312** may identify a sequence of possible target values having the lowest cost using convex optimization techniques. For example, the MPC module **312** may determine the target values **266-270** using a quadratic programming (QP) solver, such as a Dantzig QP solver. In another example, the MPC module **312** may generate a surface of cost values for the possible sequences of the target values **266-270** and, based on the slope of the cost surface, identify a sequence of possible target values having the lowest cost. The MPC module **312** may then test that sequence of possible target values to determine whether that sequence of possible target values satisfies the actuator constraints **348** and the output constraints **352**. If so, the MPC module **312** may set the target values **266-270** to the first ones of the N values of that selected possible sequence, respectively, as discussed above.

If the actuator constraints **348** and/or the output constraints **352** are not satisfied, the MPC module **312** selects another sequence of possible target values with a next lowest cost and tests that sequence of possible target values for satisfaction of the actuator constraints **348** and the output constraints **352**. The process of selecting a sequence and testing the sequence for satisfaction of the actuator constraints **348** and the output constraints **352** may be referred to as an iteration. Multiple iterations may be performed during each control loop.

The MPC module **312** performs iterations until a sequence with the lowest cost that satisfies the actuator constraints **348** and the output constraints **352** is identified. In this manner, the MPC module **312** selects the sequence of possible target values having the lowest cost while satisfying the actuator constraints **348** and the output constraints **352**. If a sequence cannot be identified, the MPC module **312** may indicate that no solution is available.

The cost module **332** may determine the cost for the possible sequences of the target values **266-270** based on relationships between: the predicted torque and the base air torque request **308**; the predicted APC and a predetermined minimum APC; the possible target values and the respective actuator constraints **348**; the other predicted parameters and the respective output constraints **352**; and the possible target values and the respective reference values **356**. The relationships may be weighted, for example, to control the effect that each of the relationships has on the cost.

For example only, the cost module **332** may determine the cost for a possible sequence of the target values **266-270** based on the following relationship:

$$\text{Cost}=\Sigma_{i=1}^{N}\rho\epsilon^2+\|wT*(TP_i-BATR)\|^2+\|wA*(APCP_i-MinAPC)\|^2+\|wTV*(PTTOi-TORef)\|^2+\|wWG*(PTWGOi-EGORef)\|^2+\|wEGR*(PTEGROi-EGRORef)\|^2+\|wIP*(PTICPi-ICPRef)\|^2+\|wEP*(PTECPi-ECPRef)\|^2,$$

subject to the actuator constraints **348** and the output constraints **352**. Cost is the cost for the possible sequence of the target values **266-270**, TPi is the predicted torque of the engine **102** for an i-th one of the N control loops, BATR is the base air torque request **308**, and wT is a weighting value associated with the relationship between the predicted torque and the base air torque request **308**. APCPi is a predicted APC for the i-th one of the N control loops, MinAPC is the predetermined minimum APC, and wA is a weighting value associated with the relationship between the predicted APC and the predetermined minimum APC.

PTTOi is a possible target throttle opening for the i-th one of the N control loops, TORef is the reference throttle opening, and wTV is a weighting value associated with the relationship between the possible target throttle openings and the reference throttle opening. PTWGOi is a possible target wastegate opening for the i-th one of the N control loops, WGORef is the reference wastegate opening, and wWG is a weighting value associated with the relationship between the possible target wastegate openings and the reference wastegate opening.

PTEGROi is a possible target EGR opening for the i-th one of the N control loops, EGRRef is the reference EGR opening, and wEGR is a weighting value associated with the relationship between the possible target EGR openings and the reference EGR opening. PTICi is a possible target intake cam phaser angle for the i-th one of the N control loops, ICPRef is the reference intake cam phaser angle, and wIP is a weighting value associated with the relationship between the possible target intake cam phaser angle and the reference intake cam phaser angle. PTECi is a possible target exhaust cam phaser angle for the i-th one of the N control loops, ECPRef is the reference exhaust cam phaser angle, and wEP is a weighting value associated with the relationship between the possible target exhaust cam phaser angle and the reference exhaust cam phaser angle.

$\rho$ is a weighting value associated with satisfaction of the output constraints **352**. $\epsilon$ is a variable that the cost module **332** may set based on whether the output constraints **352** will be satisfied. For example, the cost module **332** may increase $\epsilon$ when a predicted parameter is greater than or less than the corresponding minimum or maximum value (e.g., by at least a predetermined amount). The cost module **332** may set $\epsilon$ to zero when all of the output constraints **352** are satisfied. $\rho$ may be greater than the weighting value wT, the weighting value wA, and the other weighting values (wTV, wWG, wEGR, wIP, wEP) such that the cost determined for a possible sequence will be large if one or more of the output constraints **352** are not satisfied. This may help prevent selection of a possible sequence where one or more of the output constraints **352** are not satisfied.

The weighting value wT may be greater than the weighting value wA and the weighting values wTV, wWG, wEGR, wIP, and wEP. In this manner, the relationship between the relationship between the predicted engine torque and the base air torque request **308** have a larger effect on the cost and, therefore, the selection of one of the possible sequences as discussed further below. The cost increases as the difference between the predicted engine torque and the base air torque request **308** increases and vice versa.

The weighting value wA may be less than the weighting value wT and greater than the weighting values wTV, wWG, wEGR, wIP, and wEP. In this manner, the relationship between the predicted APC and zero has a large effect on the cost, but less than the relationship between the predicted engine torque and the base air torque request **308**. The cost increases as the difference between the predicted APC and the predetermined minimum APC increases and vice versa. For example only, the predetermined minimum APC may be zero or another suitable value.

Determining the cost based on the difference between the predicted APC and the predetermined minimum APC helps ensure that the APC will be minimized. Decreasing APC decreases fuel consumption as fueling is controlled based on the actual APC to achieve a target air/fuel mixture. As the selection module **344** may select the one of the possible sequences having the lowest cost, the selection module **344** may select the one of the possible sequences that best achieves the base air torque request **308** while minimizing APC. While the example of minimizing APC is discussed, in various implementations, an efficiency parameter may be predicted and maximized. For example, the efficiency parameter may be predicted torque divided by predicted APC or a predicted fuel consumption.

The weighting values wTV, wWG, wEGR, wIP, and wEP may be less than all of the other weighting values. In this manner, during steady-state operation, the target values **266-270** may settle near or at the reference values **356**, respectively. During transient operation, however, the MPC module **312** may adjust the target values **266-270** away from the reference values **356** in order to achieve the base air torque request **308**, while minimizing the APC and satisfying the actuator constraints **348** and the output constraints **352**.

Referring now to FIG. **4**, an example method of controlling the throttle valve **112**, the intake cam phaser **148**, the exhaust cam phaser **150**, the wastegate **162** (and therefore the turbocharger), and the EGR valve **170** using MPC (model predictive control) begins at **402**. At **404**, the torque requesting module **224** determines the air torque request **265** based on the adjusted predicted and immediate torque requests **263** and **264**.

At **408**, the torque conversion module **304** converts the air torque request **265** into the base air torque request **308** or into another suitable type of torque for use by the MPC module **312**. At **408**, the sequence determination module **316** determines possible sequences of the target values **266-270** based on the base air torque request **308**.

At **410**, the prediction module **323** determines the predicted parameters for each of the possible sequences of target values. The prediction module **323** determines the predicted parameters for the possible sequences based on the model **324** of the engine **102**, the exogenous inputs **328**, and the feedback inputs **330**. More specifically, based on a possible sequence of the target values **266-270**, the exogenous inputs **328**, and the feedback inputs **330**, using the model **324**, the prediction module **323** generates a sequence of predicted torques of the engine **102** for the N control loops, a sequence of predicted APCs for the N control loops, a sequence of predicted amounts of external dilution for the N control loops, a sequence of predicted amounts of residual dilution for the N control loops, a sequence of predicted combustion phasing values for the N control loops, and a sequence of predicted combustion quality values for the N control loops.

At **412**, the cost module **332** determines the costs for the possible sequences, respectively. For example only, the cost module **332** may determine the cost for a possible sequence of the target values **266-270** based on the equation

$$\text{Cost}=\Sigma_{i=1}^{N}\rho\epsilon^2+\|wT*(TP_i-BATR)\|^2+\|wA*(APCP_i-0)\|^2+\|wTV*(PTTOi-TORef)\|^2+\|wWG*(PTWGOi-EGORef)\|^2+\|wEGR*(PTEGROi-EGRORef)\|^2+\|wIP*(PTICPi-ICPRef)\|^2+\|wEP*(PTECPi-ECPRef)\|^2,$$

subject to the actuator constraints **348** and the output constraints **352**, as discussed above.

At **414**, the selection module **344** selects one of the possible sequences of the target values **266-270** based on the costs of the possible sequences. For example, the selection module **344** may select the one of the possible sequences having the lowest cost. The selection module **344** may therefore select the one of the possible sequences that best achieves the base air torque request **308** while minimizing the APC. Instead of or in addition to determining possible sequences of the target values **230-244** at **408** and determining the cost of each of the sequences at **412**, the MPC module **312** may identify a sequence of possible target values having the lowest cost using convex optimization techniques as discussed above.

At **416**, the MPC module **312** determines whether the selected one of the possible sequences satisfies the actuator constraints **348**. If the selected one of the possible sequences satisfies the actuator constraints **348**, the method continues at **418**. Otherwise, the method continues at **420**, where the MPC module **312** selects the one of the possible sequences with the next lowest cost. The method then returns to **416**. In this manner, the sequence with the lowest cost that satisfies the actuator constraints **348** is used.

At **418**, the first conversion module **272** converts the target wastegate opening area **266** into the target duty cycle **274** to be applied to the wastegate **162**, the second conversion module **276** converts the target throttle opening area **267** into the target duty cycle **278** to be applied to the throttle valve **112**. Also at **418**, the third conversion module **280** converts the target EGR opening area **268** into the target duty cycle **282** to be applied to the EGR valve **170**. Also at **418**, the fourth conversion module converts the target intake and exhaust cam phaser angles **269** and **270** into the target intake and exhaust duty cycles to be applied to the intake and exhaust cam phasers **148** and **150**, respectively.

At **422**, the throttle actuator module **116** controls the throttle valve **112** to achieve the target throttle opening area **267**, and the phaser actuator module **158** controls the intake and exhaust cam phasers **148** and **150** to achieve the target intake and exhaust cam phaser angles **269** and **270**, respectively. For example, the throttle actuator module **116** may apply a signal to the throttle valve **112** at the target duty cycle **278** to achieve the target throttle opening area **267**.

Also at **422**, the EGR actuator module **172** controls the EGR valve **170** to achieve the target EGR opening area **268**, and the boost actuator module **164** controls the wastegate **162** to achieve the target wastegate opening area **266**. For example, the EGR actuator module **172** may apply a signal to the EGR valve **170** at the target duty cycle **282** to achieve the target EGR opening area **268**, and the boost actuator module **164** may apply a signal to the wastegate **162** at the target duty cycle **274** to achieve the target wastegate opening area **266**. While the method is shown ending at **424**, FIG. **4** may illustrate one control loop, and control loops may be executed at a predetermined rate.

Referring back to FIG. **3**, a remedial action module **380** may monitor the amount of time that elapses as the MPC module **312** performs iterations and take one or more redial actions when the elapsed time is greater than a threshold. For example, the remedial action module **380** may instruct the MPC module **312** to suspend iterations when the elapsed time of iterations started during the current control loop executed by the ECM **114** is greater than or equal to a first period. The elapsed time of iterations started during the current control loop may be referred to as the current iteration time even though the iterations may be performed during subsequent control loops. The first period may be predetermined to allow sufficient time for the other tasks to complete before the current control loop ends. For example, if the period of each control loop executed by the ECM **114** is 25 milliseconds (ms) and the other tasks require 2 ms to complete, the first period may be set to 23 ms.

The other tasks are tasks that are not performed by the MPC module **312** and may have a lower priority than the control loop executed by the MPC module **312**. For example, the other tasks may include measuring the engine coolant temperature, measuring an exhaust gas temperature, determining a generator load, and/or determining an air conditioner load. The ECM **114** may assign a higher priority to a task with a faster loop rate relative to a task with a slower loop rate. For example, a task with a loop rate of 25 ms may be assigned a higher priority than a task with a loop rate of 50 ms. In addition, the ECM **114** may assign a higher priority to synchronous-based tasks relative to time-based tasks. The loop rate of a time-based task is known, while the loop rate of a synchronous-based task is unknown.

The remedial action module **380** may instruct the MPC module **312** to resume iterations when the other tasks are complete. If the MPC module **312** selects one of the possible sequences of the target values **266-270** before the control loop executed by the ECM **114** ends, the remedial action module **380** allows the MPC module **312** to set the target values **266-270** to the first ones of the N values of the selected sequence.

When the current iteration time is greater than or equal to a second period, the remedial action module **380** may instruct the MPC module **312** to set the target values **266-270** for the current control loop independent of the possible sequences of the target values **266-270** for the iterations started during the current control loop. The second period may be greater than the first period and/or equal to the period of the control loop executed by the ECM **114**. In one example, the remedial action module **380** may instruct the MPC module **312** to set the target values **266-270** to the respective ones of the reference values **356** subject to the actuator constraints **348** and the output constraints. In a second example, the remedial action module **380** may instruct the MPC module **312** to set the target values **266-270** to the first ones of the N values of the possible sequence of the target values **266-270** selected during a previous control loop. In a third example, the remedial action module **380** may instruct the MPC module **312** to set the target values **266-270** to the second ones of the N values of the possible sequence of the target values **266-270** selected during the previous control loop.

In addition, when the current iteration time is greater than or equal to the second period, the remedial action module **380** may instruct the MPC module **312** to refrain from starting a new set of iterations during the next control loop. Then, if the MPC module **312** selects one of the possible sequences of the target values **266-270**, the MPC module **312** may set the target values **266-270** for the next control loop equal to the first ones of the N values of the selected sequence. In other words, the MPC module **312** may set the target values **266-270** for the next control loop based on iterations started during the current control loop when the current iteration time extends into the period allotted for the next control loop.

In this manner, the remedial action module **380** allows the MPC module **312** to complete the iterations started during the current control loop. The MPC module **312** may then restart iterations during the control loop after the next control loop. Allowing the MPC module **312** to complete the

iterations started during the current control loop may reduce the amount of time required to complete iterations started during subsequent control loops. In addition, the loop rate of the MPC module **312** may be decreased relative to a worst-case loop rate for the longest expected iteration time.

When the current iteration time is greater than a third period, the solution sought by the MPC module **312** may be infeasible or there may be another fault in the MPC module **312**. Thus, the remedial action module **380** may diagnose a fault in the MPC module **312** and generate a fault signal **384**. In addition, the remedial action module **380** may reset and reinitialize the MPC module **312** by, for example, clearing memory in the MPC module **312**. Further, the remedial action module **380** may activate the service indicator **199** and/or set a diagnostic trouble code (DTC). The third period may be greater than the second period and may be equal to the sum of the periods of two control loops executed by the ECM **114**. Thus, the current iteration time may extend into the period allotted for the control loop after the next control loop when the current iteration time is greater than the third period.

When the fault signal **384** is generated, a backup module **388** may set the target values **266-270** to the reference values **356**, respectively. More specifically, the backup module **388** may set the target wastegate opening area **266** to the reference wastegate opening area, the target throttle opening area **267** to the reference throttle opening area, the target EGR opening area **268** to the reference EGR opening area, the target intake cam phaser angle **269** to the reference intake cam phaser angle, and the target exhaust cam phaser angle **270** to the reference exhaust cam phaser angle. In addition, the backup module **388** may limit changes in the target values **266-270** and/or limit the torque output of the engine **102** by adjusting the target values **266-270** or by disabling certain actuators. For example, the backup module **388** may limit the torque output of the engine **102** by fully opening the wastegate **162**, closing the throttle valve **112**, retarding the intake and exhaust cam phasers **148** and **150**, disabling fuel delivery to one or more cylinders of the engine **102**, and/or disabling spark in one or more cylinders of the engine **102**. The backup module **388** may set the target values **266-270** to those set by the MPC module **312** when the fault signal **384** is not generated.

In various implementations, the period required to perform a single iteration may be predetermined. In these implementations, the remedial action module **380** may monitor the number of iterations that the MPC module **312** performs and multiply the number of iterations by the predetermined iteration period to obtain the current iteration time. Alternatively, instead of comparing the current iteration time to a first period, a second period, and a third period, the remedial action module **380** may compare the number of iterations to a first value, a second value, and a third value. The first value, the second value, and the third value may be predetermined and/or may be determined by dividing the first period, the second period, and the third period by the predetermined iteration period.

Referring now to FIG. **5**, a method for managing a period of a control loop executed by the MPC module **312** begins at **502**. At **504**, the remedial action module **380** monitors the amount of time that elapses as the MPC module **312** completes iterations started during the current control loop executed by the ECM **114**. As discussed above, the elapsed time may be referred to as the current iteration time.

At **506**, the remedial action module **380** determines whether the current iteration time is greater than or equal to the first period. As discussed above, the first period may be predetermined to allow sufficient time for other tasks to complete before the current control loop ends. If the current iteration time is greater than or equal to the first period, the method continues at **508**. Otherwise, the MPC module **312** is operating normally. Thus, the method returns to **504** and the MPC module **312** continues to perform iterations until a solution is found. If the MPC module **312** selects a sequence of possible target values while the current iteration time is less than the first period, the MPC module **312** may command the next position for each engine actuator according to the selected sequence.

At **508**, the remedial action module **380** instructs the MPC module **312** to suspend iterations. At **510**, the remedial action module **380** determines whether the other tasks are complete. As discussed above, the other tasks are tasks that are not performed by the MPC module **312** and may have a lower priority than the control loop executed by the MPC module **312**. If the other tasks are complete, the method continues at **512** where the MPC module **312** resumes iterations. Otherwise, the method returns to **508** and the MPC module **312** continues to suspend iterations.

At **514**, the remedial action module **380** determines whether the current iteration time is greater than or equal to the second period. As discussed above, the second period may be greater than the first period and/or equal to the period of the control loop executed by the ECM **114**. If the current iteration time is greater than or equal to the second period, the method continues at **516**. Otherwise, the method returns to **512** and the MPC module **312** continues to perform iterations until a solution is obtained.

At **516**, the remedial action module **380** instructs the MPC module **312** to set the target values **266-270** for the current control loop independent of the possible sequences of the target values **266-270** for the iterations started during the current control loop. In one example, the remedial action module **380** may instruct the MPC module **312** to set the target values **266-270** to the respective ones of the reference values **356** subject to the actuator constraints **348** and the output constraints. In a second example, the remedial action module **380** may instruct the MPC module **312** to set the target values **266-270** to the first ones of the N values of the possible sequence of the target values **266-270** selected during a previous control loop. In a third example, the remedial action module **380** may instruct the MPC module **312** to set the target values **266-270** to the second ones of the N values of the possible sequence of the target values **266-270** selected during the previous control loop.

Also at **516**, the remedial action module **380** may instruct the MPC module **312** to refrain from starting a new set of iterations during the next control loop. Then, if the MPC module **312** selects one of the possible sequences of the target values **266-270**, the MPC module **312** may set the target values **266-270** for the next control loop equal to the first ones of the N values of the selected sequence. In other words, the MPC module **312** may set the target values **266-270** for the next control loop based on iterations started during the current control loop when the current iteration time extends into the period allotted for the next control loop.

At **518**, the remedial action module **380** determines whether the current iteration time is greater than the third period. As discussed above, the third period may be greater than the second period and may be equal to the sum of the periods of two control loops executed by the ECM **114**. Thus, the current iteration time may extend into the period allotted for the control loop after the next control loop when the current iteration time is greater than the third period. If

the current iteration time is greater than the third period, the method continues at **520**. Otherwise, the method returns to **516** and the MPC module **312** continues to perform iterations until a solution is obtained.

At **520**, the remedial action module **380** may diagnose a fault in the MPC module **312** and generate a fault signal **384**. Also at **520**, the remedial action module **380** may reset and reinitialize the MPC module **312** by, for example, clearing memory in the MPC module **312**. Also at **520**, the remedial action module **380** may activate the service indicator **199** and/or set a diagnostic trouble code (DTC).

Referring now to FIG. **6**, example scenarios associated with the method of FIG. **5** are illustrated. The scenarios illustrated include a first scenario **602**, a second scenario **604**, a third scenario **606**, and a fourth scenario **608**. The scenarios **602-608** are plotted with respect to an x-axis **610** that represents time.

In all of the scenarios **602-608**, the ECM **114** executes a first control loop from **612** to **614**, the ECM **114** executes a second control loop from **614** to **616**, and the MPC module **312** starts a first set **618** of MPC iterations at **612**. The time that elapses as the MPC module **312** completes the first set **618** may be referred to as the current iteration time. In the first scenario **602**, the MPC module **312** completes the first set **618** at **620** when the MPC module **312** finds a solution. Thus, from **620** to **622**, the ECM **114** performs other (non-MPC) tasks **624**.

The ECM **114** completes the other tasks **624** before a first time **626**. The period from **612** to the first time **626** may be equal to the first period discussed above. Since the MPC module **312** completes the first set **618** of MPC iterations before the first time **626**, the first scenario **602** illustrates normal operation of the MPC module **312**. In this regard, the first scenario **602** may correspond to the case in FIG. **5** where, at **506**, the current iteration time is less than the first period.

At **614**, the first control loop ends and the second control loop begins. Since the MPC module **312** completed the first set **618** during the first control loop, the MPC module **312** starts a second set **628** of MPC iterations at **614**. In the first and second sets **618** and **628**, each square represents a single iteration.

In the second scenario **604**, the MPC module **312** does not complete the first set **618** before the first time **626**. In this regard, the second scenario **604** may correspond to the case in FIG. **5** where, at **506**, the current iteration time is greater than or equal to the first period. Thus, at the first time **626**, the MPC module **312** suspends the first set **618** to allow the ECM **114** to complete the other tasks **624**.

At **630**, the ECM **114** completes the other tasks **624**. Thus, the MPC module **312** resumes the first set **618** of MPC iterations. The MPC module **312** completes the first set **618** during the first control loop. Thus, at **614**, the MPC module **312** starts the second set **628** of MPC iterations.

In the third scenario **606**, the ECM **114** does not complete the other tasks **624** until **614**, at which point the MPC module **312** resumes the first set **618**. Thus, the MPC module **312** does not complete the first set **618** during the first control loop. In this regard, the second scenario may correspond to the case in FIG. **5** where, at **514**, the current iteration time is greater than or equal to the second period.

Since the MPC module **312** did not complete the first set **618** during the first control loop, the MPC module **312** does not start the second set **628** at **614**. In addition, the MPC module **312** sets the target values for the first control loop independent of the sequence of possible target values selected upon completion of the first set **618**. For example, the MPC module **312** may set the target values for the first control loop to the target values set in the last control loop. At **632**, the MPC module **312** completes the first set **618** and selects a sequence of possible target values. In turn, the MPC module **312** may set the target values for the second control loop to the first ones of the selected sequence of possible target values.

In the fourth scenario **608**, the MPC module **312** does not complete the first set **618** before a second time **634**. The period from **614** to the second time **634** may be equal to the first period. Thus, at the second time **634**, the MPC module **312** suspends the first set **618** to allow the ECM **114** to complete the other tasks **624**.

At **616**, the ECM **114** completes the other tasks, at which point the MPC module **312** resumes the first set **618** of MPC iterations. Thus, the MPC module **312** does not complete the first set **618** during the second control loop. In this regard, the fourth scenario **608** may correspond to the case in FIG. **5** where, at **518**, the current iteration time is greater than or equal to the third period. Thus, at **616**, the remedial action module **380** may diagnose a fault in the MPC module **312**, reset and reinitialize the MPC module **312**, and/or activate the service indicator **199**. Alternatively, the remedial action module **380** may not perform these actions until the ECM **114** completes a predetermined number of control loops greater than two.

The foregoing description is merely illustrative in nature and is in no way intended to limit the disclosure, its application, or uses. The broad teachings of the disclosure can be implemented in a variety of forms. Therefore, while this disclosure includes particular examples, the true scope of the disclosure should not be so limited since other modifications will become apparent upon a study of the drawings, the specification, and the following claims. As used herein, the phrase at least one of A, B, and C should be construed to mean a logical (A or B or C), using a non-exclusive logical OR. It should be understood that one or more steps within a method may be executed in different order (or concurrently) without altering the principles of the present disclosure.

In this application, including the definitions below, the term module may be replaced with the term circuit. The term module may refer to, be part of, or include an Application Specific Integrated Circuit (ASIC); a digital, analog, or mixed analog/digital discrete circuit; a digital, analog, or mixed analog/digital integrated circuit; a combinational logic circuit; a field programmable gate array (FPGA); a processor (shared, dedicated, or group) that executes code; memory (shared, dedicated, or group) that stores code executed by a processor; other suitable hardware components that provide the described functionality; or a combination of some or all of the above, such as in a system-on-chip.

The term code, as used above, may include software, firmware, and/or microcode, and may refer to programs, routines, functions, classes, and/or objects. The term shared processor encompasses a single processor that executes some or all code from multiple modules. The term group processor encompasses a processor that, in combination with additional processors, executes some or all code from one or more modules. The term shared memory encompasses a single memory that stores some or all code from multiple modules. The term group memory encompasses a memory that, in combination with additional memories, stores some or all code from one or more modules. The term memory may be a subset of the term computer-readable medium. The term computer-readable medium does not

encompass transitory electrical and electromagnetic signals propagating through a medium, and may therefore be considered tangible and non-transitory. Non-limiting examples of a non-transitory tangible computer readable medium include nonvolatile memory, volatile memory, magnetic storage, and optical storage.

The apparatuses and methods described in this application may be partially or fully implemented by one or more computer programs executed by one or more processors. The computer programs include processor-executable instructions that are stored on at least one non-transitory tangible computer readable medium. The computer programs may also include and/or rely on stored data.

What is claimed is:

**1**. A system comprising:

a model predictive control (MPC) module that performs MPC tasks including:

determining predicted operating parameters for a set of possible target values;

determining a cost for the set of possible target values based on the predicted operating parameters;

selecting the set of possible target values from multiple sets of possible target values based on the cost; and

setting target values to the possible target values of the selected set;

an actuator module that controls an actuator of an engine based on at least one of the target values; and

a remedial action module that selectively takes a remedial action based on at least one of an amount of time that elapses as the MPC tasks are performed and a number of iterations of the MPC tasks that are performed.

**2**. The system of claim **1** wherein the remedial action module instructs the MPC module to suspend the MPC tasks when the elapsed time is greater than a first period.

**3**. The system of claim **2** wherein:

the remedial action module instructs the MPC module to resume the MPC tasks when other tasks are complete; and

the other tasks have less priority than the MPC tasks.

**4**. The system of claim **2** wherein:

the remedial action module instructs the MPC module to set the target values for a present control loop independent of the possible target values for iterations started during the present control loop when the elapsed time is greater than a second period; and

the second period is greater than the first period.

**5**. The system of claim **4** wherein the remedial action module instructs the MPC module to set the target values for the present control loop to the target values set during a previous control loop when the elapsed time is greater than the second period.

**6**. The system of claim **4** wherein:

the MPC module sets the target values for the present control loop and a future control loop when completing the iterations started during the present control loop; and

when the elapsed time is greater than the second period, the remedial action module instructs the MPC module to set the target values for the present control loop to the target values set for the future control loop during a previous control loop.

**7**. The system of claim **4** wherein the remedial action module instructs the MPC module to refrain from restarting the MPC tasks during a future control loop when the elapsed time is greater than the second period.

**8**. The system of claim **4** wherein:

the remedial action module takes the remedial action when the elapsed time is greater than a third period; and

the third period is greater than the second period.

**9**. The system of claim **8** wherein the remedial action includes at least one of limiting the torque output of the engine and activating a service indicator.

**10**. The system of claim **8** wherein the MPC module determines the cost for each of the sets of possible target values based on differences between the possible target values and reference values, the system further comprising a backup module that sets the target values for the present control loop to reference values when the elapsed time is greater than the third period.

**11**. A method comprising:

performing MPC tasks including:

determining predicted operating parameters for a set of possible target values;

determining a cost for the set of possible target values based on the predicted operating parameters;

selecting the set of possible target values from multiple sets of possible target values based on the cost; and

setting target values to the possible target values of the selected set;

controlling an actuator of an engine based on at least one of the target values; and

selectively taking a remedial action based on at least one of an amount of time that elapses as the MPC tasks are performed and a number of iterations of the MPC tasks that are performed.

**12**. The method of claim **11** further comprising suspending the MPC tasks when the elapsed time is greater than a first period.

**13**. The method of claim **12** further comprising resuming the MPC tasks when other tasks are complete, wherein the other tasks have less priority than the MPC tasks.

**14**. The method of claim **12** further comprising setting the target values for a present control loop independent of the possible target values for iterations started during the present control loop when the elapsed time is greater than a second period, wherein the second period is greater than the first period.

**15**. The method of claim **14** further comprising setting the target values for the present control loop to the target values set during a previous control loop when the elapsed time is greater than the second period.

**16**. The method of claim **14** further comprising:

setting the target values for the present control loop and a future control loop when completing the iterations started during the present control loop; and

when the elapsed time is greater than the second period, setting the target values for the present control loop to the target values set for the future control loop during a previous control loop.

**17**. The method of claim **14** further comprising refraining from restarting the MPC tasks during a future control loop when the elapsed time is greater than the second period.

**18**. The method of claim **14** further comprising taking the remedial action when the elapsed time is greater than a third period, wherein the third period is greater than the second period.

**19**. The method of claim **18** wherein the remedial action includes at least one of limiting the torque output of the engine and activating a service indicator.

**20**. The method of claim **18** further comprising:

determining the cost for each of the sets of possible target values based on differences between the possible target values and reference values; and

setting the target values for the present control loop to reference values when the elapsed time is greater than the third period.

* * * * *