US010119481B2

(12) **United States Patent**
Livshiz et al.

(10) **Patent No.: US 10,119,481 B2**
(45) **Date of Patent: Nov. 6, 2018**

(54) **COORDINATION OF TORQUE INTERVENTIONS IN MPC-BASED POWERTRAIN CONTROL**

(71) Applicant: **GM GLOBAL TECHNOLOGY OPERATIONS LLC**, Detroit, MI (US)

(72) Inventors: **Michael Livshiz**, Ann Arbor, MI (US); **Bharath Pattipati**, South Lyon, MI (US); **Christopher E. Whitney**, Commerce, MI (US); **Daniele Bernardini**, Milan (IT); **Alberto Bemporad**, Lucca (IT)

(*) Notice: Subject to any disclaimer, the term of this patent is extended or adjusted under 35 U.S.C. 154(b) by 0 days.

(21) Appl. No.: **15/465,647**

(22) Filed: **Mar. 22, 2017**

(65) **Prior Publication Data**

US 2018/0274453 A1 Sep. 27, 2018

(51) **Int. Cl.**
F02D 11/10 (2006.01)
F16H 63/50 (2006.01)
(Continued)

(52) **U.S. Cl.**
CPC ***F02D 11/105*** (2013.01); ***F02D 29/02*** (2013.01); ***F02D 41/1402*** (2013.01);
(Continued)

(58) **Field of Classification Search**
CPC F02D 11/10; F02D 11/105; F02D 29/02; F02D 41/14; F02D 41/1402;
(Continued)

(56) **References Cited**

U.S. PATENT DOCUMENTS

4,161,929 A 7/1979 Nohira et al.
5,101,786 A 4/1992 Kamio et al.
(Continued)

FOREIGN PATENT DOCUMENTS

CN 1594846 A 3/2005
WO 2003065135 A1 8/2003

OTHER PUBLICATIONS

US Application filed Nov. 3, 2015; U.S. Appl. No. 14/931,134, Applicant: GM Global Technology Dperations LLC; Title: System and Method for Adjusting Weighting Values Assigned to Errors in Target Actuator Values of an Engine When Controlling the Engine Using Model Predictive Control.
(Continued)

Primary Examiner — John Kwon
Assistant Examiner — Johnny H Hoang

(57) **ABSTRACT**

A propulsion system, control system, and method are provided for optimizing fuel economy, which use model predictive control systems to generate a plurality of sets of possible command values and determine a cost for each set of possible command values of based on a first predetermined weighting value, a second predetermined weighting value, a plurality of predicted values, and a plurality of requested values. The set of possible command values having the lowest cost is determined and defined as a set of selected command values. Arbitration is performed including at least one of the following: A) determining at least one requested value based on arbitrating between a driver requested value and an intervention requested value; and B) determining a desired command value by arbitrating between a selected command value of the set of selected command values and a command intervention value.

20 Claims, 6 Drawing Sheets

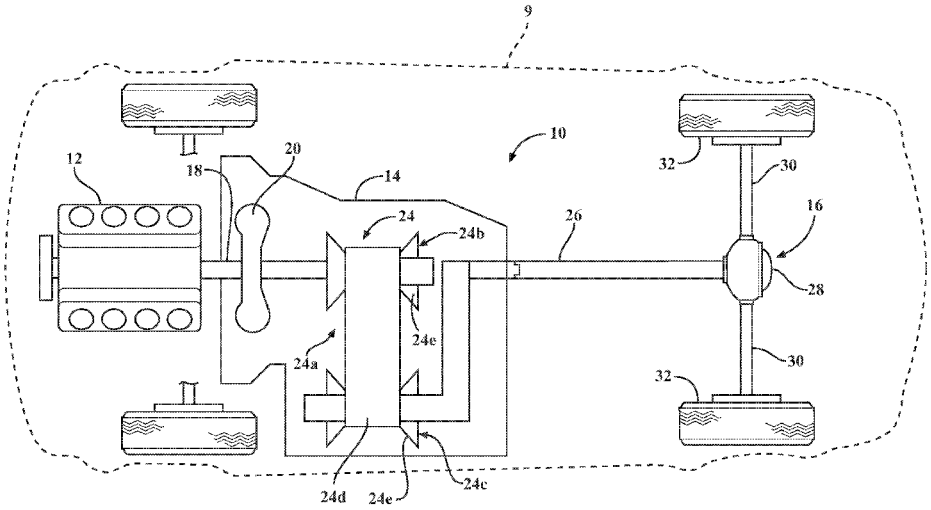

(51) **Int. Cl.**
F02D 29/02 (2006.01)
F02D 41/14 (2006.01)

(52) **U.S. Cl.**
CPC ***F16H 63/50*** (2013.01); *F02D 2041/1412* (2013.01); *F02D 2041/1433* (2013.01); *F02D 2250/18* (2013.01)

(58) **Field of Classification Search**
CPC F02D 2250/18; F02D 2041/14; F02D 2041/1402; F02D 2041/1412; F02D 2041/1433; B60W 10/06; B60W 10/11; B60W 10/16; B60W 30/188; B60W 2510/0638; B60W 2510/0619; B60W 2520/10; B60W 2540/10; B60W 2710/105; B60W 2710/0619; B60W 2710/0638; B60W 2710/0666; F16H 63/50
USPC 701/110–114
See application file for complete search history.

(56) **References Cited**

U.S. PATENT DOCUMENTS

5,706,780 A 1/1998 Shirakawa
5,727,528 A 3/1998 Hori et al.
5,775,293 A 7/1998 Kresse
5,921,219 A 7/1999 Frohlich et al.
6,014,955 A 1/2000 Hosotani et al.
6,155,230 A 12/2000 Iwano et al.
6,173,226 B1 1/2001 Yoshida
6,532,935 B2 3/2003 Ganser et al.
6,606,981 B2 8/2003 Itovama
6,704,638 B2 3/2004 Livshiz et al.
6,826,904 B2 12/2004 Miura
6,840,215 B1 1/2005 Livshiz et al.
7,016,779 B2 3/2006 Bowyer
7,021,282 B1 4/2006 Livshiz et al.
7,051,058 B2 5/2006 Wagner et al.
7,222,012 B2 5/2007 Simon, Jr.
7,236,874 B2 * 6/2007 Ichihara ..... F02D 11/105 123/198 DB
7,274,986 B1 9/2007 Petridis et al.
7,395,147 B2 7/2008 Livshiz et al.
7,400,967 B2 7/2008 Ueno et al.
7,433,775 B2 10/2008 Livshiz et al.
7,441,544 B2 10/2008 Hagari
7,563,194 B2 7/2009 Murray
7,614,384 B2 11/2009 Livshiz et al.
7,698,048 B2 4/2010 Jung
7,703,439 B2 4/2010 Russell et al.
7,715,975 B2 5/2010 Yamaoka et al.
7,775,195 B2 8/2010 Schondorf et al.
7,813,869 B2 10/2010 Grichnik et al.
7,885,756 B2 2/2011 Livshiz et al.
7,941,260 B2 5/2011 Lee et al.
7,967,720 B2 6/2011 Martin et al.
8,041,487 B2 10/2011 Worthing et al.
8,050,841 B2 11/2011 Costin et al.
8,073,610 B2 12/2011 Heap et al.
8,078,371 B2 12/2011 Cawthorne
8,103,425 B2 1/2012 Choi et al.
8,103,428 B2 1/2012 Russ et al.
8,116,954 B2 2/2012 Livshiz et al.
8,121,763 B2 2/2012 Hou
8,176,735 B2 5/2012 Komatsu
8,219,304 B2 7/2012 Soma
8,307,814 B2 11/2012 Leroy et al.
8,447,492 B2 5/2013 Watanabe et al.
8,468,821 B2 6/2013 Liu et al.
8,483,935 B2 7/2013 Whitney et al.
8,739,766 B2 6/2014 Jentz et al.
8,744,716 B2 6/2014 Kar
8,862,248 B2 10/2014 Yasui
8,954,257 B2 2/2015 Livshiz et al.
8,977,457 B2 3/2015 Robinette
9,062,631 B2 6/2015 Kinugawa et al.
9,067,593 B2 6/2015 Dufford
9,075,406 B2 7/2015 Nakada
9,145,841 B2 9/2015 Miyazaki et al.
9,175,628 B2 11/2015 Livshiz et al.
9,334,815 B2 5/2016 Cygan et al.
9,347,381 B2 5/2016 Long et al.
9,388,754 B2 7/2016 Cygan et al.
9,399,959 B2 7/2016 Whitney et al.
9,435,274 B2 9/2016 Wong et al.
9,541,019 B2 1/2017 Verdejo et al.
9,599,053 B2 3/2017 Long et al.
2002/0038647 A1 4/2002 Tashiro
2003/0074892 A1 4/2003 Miura
2003/0110760 A1 6/2003 Shirakawa
2003/0145836 A1 8/2003 Linna et al.
2004/0116220 A1 6/2004 Yamamoto et al.
2005/0065691 A1 3/2005 Cho
2005/0131620 A1 6/2005 Bowyer
2005/0171670 A1 8/2005 Yoshioka et al.
2006/0199699 A1 9/2006 Berolund et al.
2007/0174003 A1 7/2007 Ueno et al.
2007/0191181 A1 8/2007 Burns
2008/0271718 A1 11/2008 Schondorf et al.
2008/0308066 A1 12/2008 Martin et al.
2009/0018733 A1 1/2009 Livshiz et al.
2009/0033264 A1 2/2009 Falkenstein
2009/0037066 A1 2/2009 Kuwahara et al.
2009/0037073 A1 2/2009 Jung et al.
2009/0118968 A1 5/2009 Livshiz et al.
2009/0118969 A1 5/2009 Heap et al.
2009/0118972 A1 5/2009 Baur et al.
2009/0143959 A1 6/2009 Yamaoka et al.
2009/0229562 A1 9/2009 Ramappan et al.
2009/0288899 A1 * 11/2009 Belloso B60K 5/08 180/69.6
2009/0292435 A1 11/2009 Costin et al.
2010/0049419 A1 2/2010 Yoshikawa et al.
2010/0057283 A1 3/2010 Worthina et al.
2010/0057329 A1 3/2010 Livshiz et al.
2010/0075803 A1 3/2010 Sharples et al.
2010/0116250 A1 5/2010 Simon, Jr. et al.
2010/0180876 A1 7/2010 Leroy et al.
2010/0211294 A1 8/2010 Soeiima
2010/0263627 A1 10/2010 Whitney et al.
2010/0268436 A1 10/2010 Soejima et al.
2010/0280738 A1 11/2010 Whitney et al.
2011/0034298 A1 2/2011 Doering et al.
2011/0045948 A1 2/2011 Doering et al.
2011/0087421 A1 4/2011 Soejima et al.
2011/0100013 A1 5/2011 Whitnev et al.
2011/0113773 A1 5/2011 Liu et al.
2011/0144838 A1 6/2011 Matthews et al.
2012/0010860 A1 * 1/2012 Kirkling G06F 17/5095 703/1
2012/0065864 A1 3/2012 Whitney et al.
2012/0150399 A1 6/2012 Kar et al.
2013/0032123 A1 2/2013 Kinugawa et al.
2013/0032127 A1 2/2013 Jentz et al.
2013/0060448 A1 3/2013 Nakada
2013/0080023 A1 3/2013 Livshiz et al.
2013/0104859 A1 5/2013 Miyazaki et al.
2013/0151124 A1 6/2013 Seiberlich et al.
2013/0213353 A1 8/2013 Rollinger et al.
2014/0076279 A1 3/2014 Livshiz et al.
2014/0311446 A1 10/2014 Whitney et al.
2014/0316681 A1 10/2014 Whitney et al.
2014/0316682 A1 10/2014 Whitney et al.
2014/0316683 A1 10/2014 Whitney et al.
2015/0039206 A1 2/2015 Starch et al.
2015/0275569 A1 10/2015 LeBlanc
2015/0275711 A1 10/2015 Whitney et al.
2015/0275771 A1 10/2015 Pochner et al.
2015/0275772 A1 10/2015 Lonq et al.
2015/0275783 A1 10/2015 Wong et al.
2015/0275784 A1 10/2015 Whitney et al.
2015/0275785 A1 10/2015 Cygan, Jr. et al.

(56) **References Cited**

U.S. PATENT DOCUMENTS

2015/0275786	A1	10/2015	Jin et al.	
2015/0275789	A1	10/2015	Cygan, Jr. et al.	
2015/0275792	A1	10/2015	Genslak et al.	
2015/0275794	A1	10/2015	Verdejo et al.	
2015/0275795	A1	10/2015	Cygan, Jr. et al.	
2015/0275796	A1	10/2015	Pochner et al.	
2015/0275806	A1	10/2015	Genslak et al.	
2015/0315767	A1	11/2015	Miyamoto	
2016/0237927	A1	8/2016	Long et al.	
2016/0362100	A1*	12/2016	Piper	B60W 20/17
2017/0122235	A1	5/2017	Wong et al.	
2017/0168466	A1*	6/2017	Sun	G05B 13/026
2017/0361842	A1*	12/2017	Livshiz	B60W 30/188

OTHER PUBLICATIONS

US Application filed Feb. 9, 2015; U.S. Appl. No. 14/617,068, Applicant: GM Global Technology Operations LLC; Title: Throttle Control Systems and Methods Based on Pressure Ratio.

US Application filed Apr. 1, 2015; U.S. Appl. No. 14/675,828 , Applicant: GM Global Technology Operations LLC; Title: Model Predictive Control Systems and Methods for Increasing Computational Efficiency.

US Application filed Apr. 1, 2015; U.S. Appl. No. 14/675,860 , Applicant: GM Global Technology Operations LLC; Title: Model Predictive Control Systems and Methods for Increasing Computational Efficiency.

John C. G. Boot; "Quadratic Programming: Algorithms, Anomalies, Applications vol. 2 of Studies in mathematical and managerial economics"; North Holland Publ.Comp., 1964; 213 pages.

N. Lawrence Ricker; "Use of quadratic programming for constrained internal model control"; Ind. Eng. Chem. Process Des. Dev., 1985, pp. 925-936.

C. E. Lemke; "A Method of Solution for Quadratic Programs"; Rensselaer Polytechnic Institute, Troy, New York, Published Online: Jul. 1, 1962, pp. 442 453.

US Application filed Jun. 19, 2014; U.S. Appl. No. 14/309,047 , Applicant: GM Global Technology Operations LLC; Title: Engine Speed Control Systems and Methods.

US Application filed Sep. 13, 2012; U.S. Appl. No. 13/613,588, Applicant: GM Global Technology Operations LLC; Title: Coordinated Engine Torque Control.

US Application filed Sep. 13, 2012; U.S. Appl. No. 13/613,683, Applicant: GM Global Technology Operations LLC; Title: Coordinated Torque Control Security Systems and Methods.

US Application filed Nov. 27, 2012; U.S. Appl. No. 13/686,069, Applicant: GM Global Technology Operations LLC; Title: Airflow Control Systems and Methods.

US Application filed Jun. 6, 2013; U.S. Appl. No. 13/911,121, Applicant: GM Global Technology Operations LLC; Title: Airflow Control Systems and Methods Using Model Predictive Control.

US Application filed Jun. 6, 2013; U.S. Appl. No. 13/911,132, Applicant: GM Global Technology Operations LLC; Title: Airflow Control Systems and Methods Using Model Predictive Control.

US Application filed Jun. 6, 2013; U.S. Appl. No. 13/911,148, Applicant: GM Global Technology Operations, LLC; Title: Airflow Control Systems and Methods Using Model Predictive Control.

US Application filed Jun. 6, 2013; U.S. Appl. No. 13/911,156, Applicant: GM Global Technology Operations LLC; Title: Airflow Control Systems and Methods Using Model Predictive Control.

US Application filed Sep. 20, 2013; U.S. Appl. No. 14/032,508, Applicant: GM Global Technology Operations LLC; Title: Calibration Systems and Methods for Model Predictive Controllers.

US Application filed Mar. 14, 2014; U.S. Appl. No. 14/225,492, Applicant: GM Global Technology Operations LLC; Title: System and Method for Managing the Period of a Control Loop for Controlling an Engine Using Model Predictive Control.

US Application filed Mar. 26, 2014; U.S. Appl. No. 14/225,496, Applicant: GM Global Technology Operations LLC; Title: Engine Control Systems and Methods for Future Torque Request Increases.

US Application filed Mar. 26, 2014; U.S. Appl. No. 14/225,507, Applicant: GM Global Technology Operations LLC; Title: Non-Model Predictive Control to Model Predictive Control Transitions.

US Application filed Mar. 26, 2014; U.S. Appl. No. 14/225,516, Applicant: GM Global Technology Operations LLC; Title: System and Method for Adjusting a Torque Capacity of an Engine Using Model Predictive Control.

US Application filed Mar. 26, 2014; U.S. Appl. No. 14/225,531, Applicant: GM Global Technology Operations LLC; Title: Diagnostic Systems and Methods Using Model Predictive Control.

US Application filed Mar. 26, 2014; U.S. Appl. No. 14/225,569, Applicant: GM Global Technology Operations LLC; Title: Model Predictive Control Systems and Methods for Technology Internal Combustion Engines.

US Application filed Mar. 26, 2014; U.S. Appl. No. 14/225,587, Applicant: GM Global Technology Operations LLC; Title: System and Method for Improving the Response Time of an Engine Using Model Predictive Control.

US Application filed Mar. 26, 2014; U.S. Appl. No. 14/225,626, Applicant: GM Global Technology Operations LLC; Title: Estimation Systems and Methods With Model Predictive Control.

US Application filed Mar. 26, 2014; U.S. Appl. No. 14/225,808, Applicant: GM Global Technology Operations LLC; Title: Engine Control Systems and Methods for Transmission Upshifts.

US Application filed Mar. 26, 2014; U.S. Appl. No. 14/225,817, Applicant: GM Global Technology Operations LLC; Title: Artificial Output Reference for Model Predictive Control.

US Application filed Mar. 26, 2014; U.S. Appl. No. 14/225,891, Applicant: GM Global Technology Operations LLC; Title: Catalyst Light Off Transitions in a Gasoline Engine Using Model Predictive Control.

US Application filed Mar. 26, 2014; U.S. Appl. No. 14/225,896, Applicant: GM Global Technology Operations LLC; Title: System and Method for Increasing the Temperature of a Catalyst When an Engine is Started Using Model Predictive Control.

US Application filed Mar. 26, 2014; U.S. Appl. No. 14/226,006, Applicant: GM Global Technology Operations LLC; Title: Model Predictive Control Systems and Methods for Future Torque Changes.

US Application filed Mar. 26, 2014; U.S. Appl. No. 14/226,121, Applicant: GM Global Technology Operations LLC; Title: Fault Diagnostic Systems and Methods for Model Predictive Control.

Kolmanovsky I., "Towards Engine and Powertrain Control Based on Model Predictive Control", (Sep. 28, 2012), Powerpoint Presentation, 47 slides.

US Application filed Apr. 25, 2017; U.S. Appl. No. 15/496,746, Applicant: GM Global Technology Operations LLC; Title: A Method for Controlling an Injector for Injecting a Reductant Into an Exhaust System of an Internal Combustion Engine.

Gorinevsky, "Leson 14—Model Predictive Control Part 1: The Concept," (Spring 2005), Powerpoint Presentation, 26 Slides.

Bemporad, Alberto, "Model Predictive Control," (Spring 2005), Powerpoint Presentation, 94 Slides.

Boyd, S., "Model Predictive Control," Powerpoint Presentation, 25 Slides.

US Application filed Jun. 16, 2016; U.S. Appl. No. 15/184,706, Applicant: GM Global Technology Operations LLC; Title: Axle Torque Control System for a Motor Vehicle.

US Application filed Feb. 7, 2017; U.S. Appl. No. 15/426,306, Applicant: GM Global Technology Operations LLC; Title: Axle Torque Control System for a Motor Vehicle.

US Application filed Feb. 17, 2017; U.S. Appl. No. 15/436,235; Applicant: GM Global Technology Operations LLC; Title: Torque Security of MPC-Based Powertrain Control.

* cited by examiner

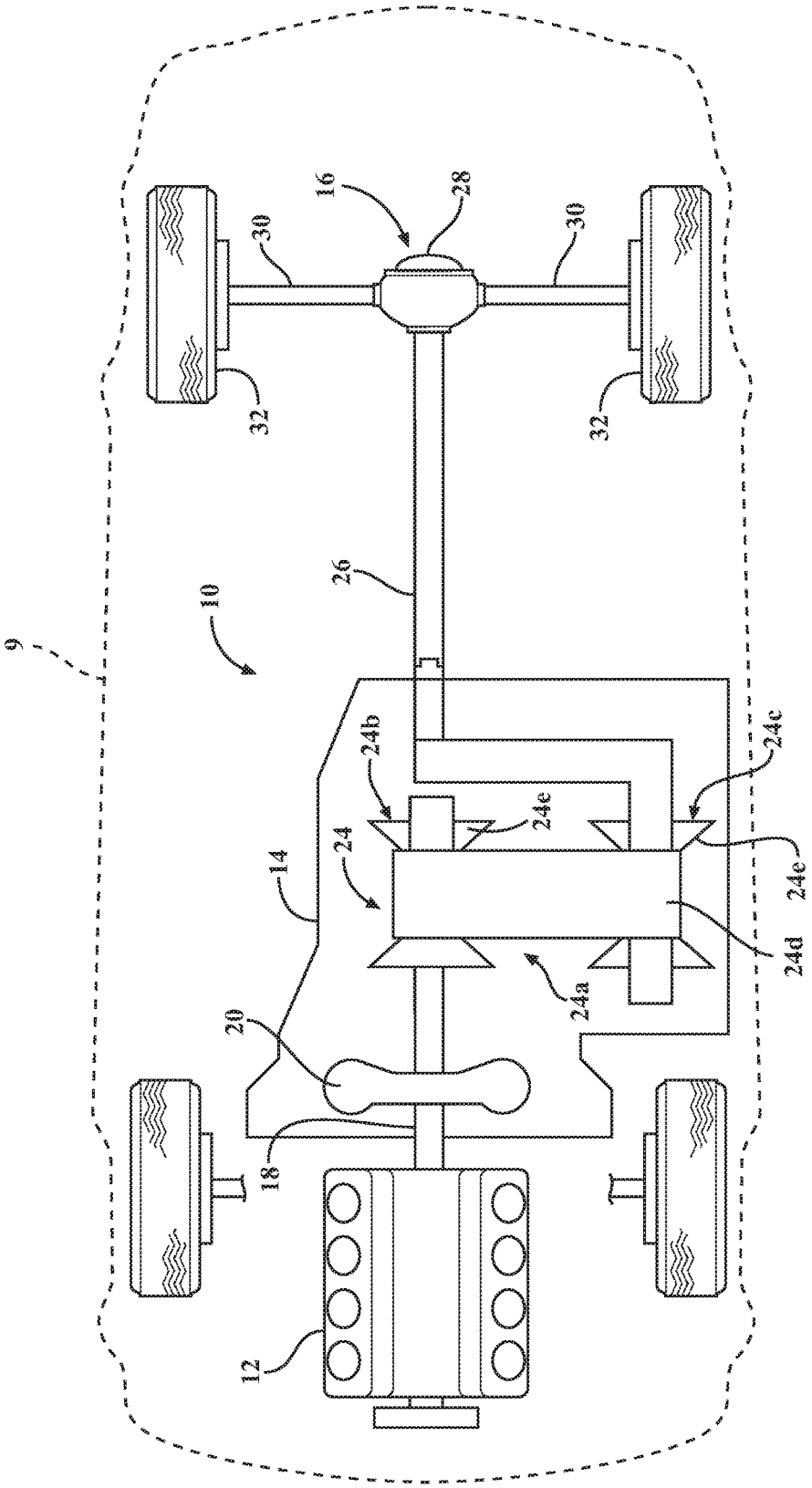

FIG. 1

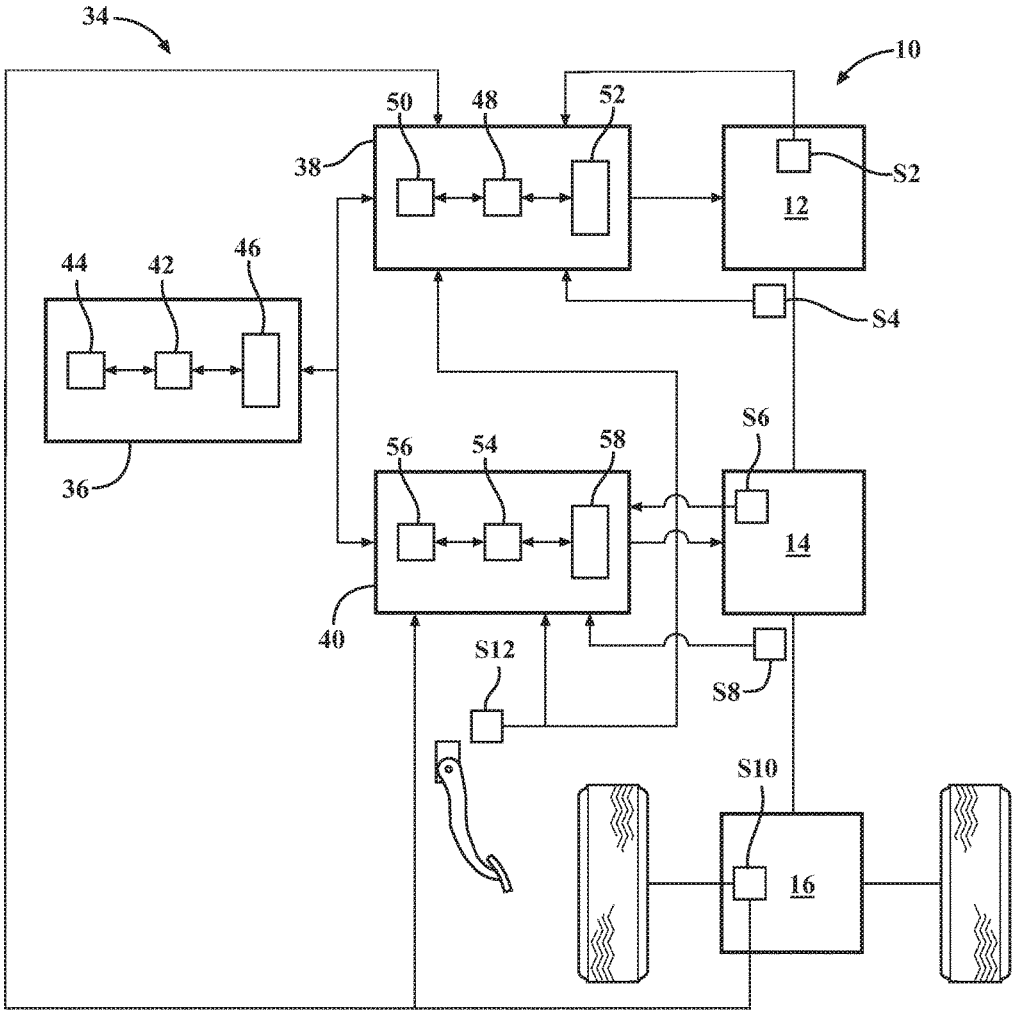

FIG. 2

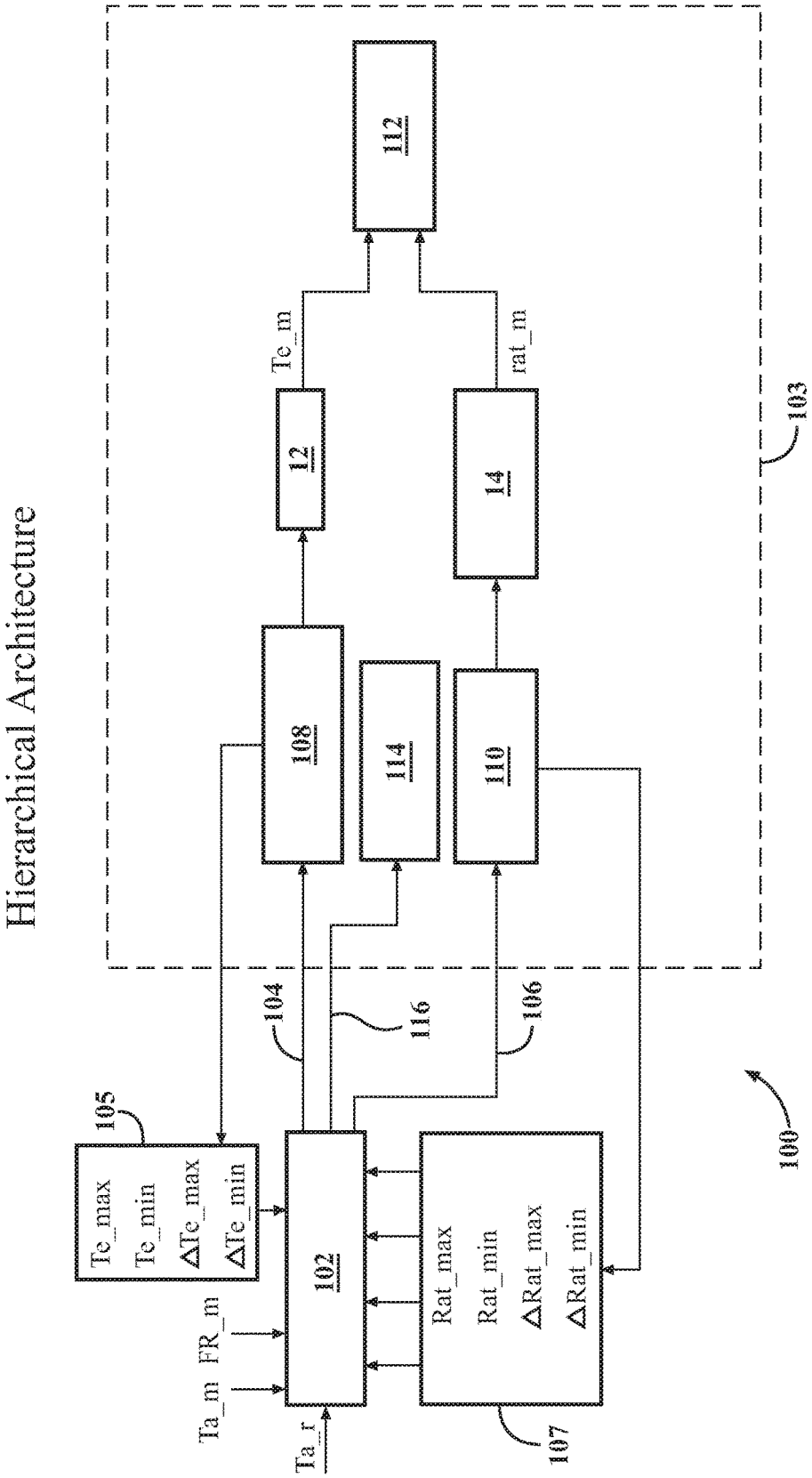
Hierarchical Architecture
Te_max
Te_min
ΔTe_max
ΔTe_min
105
Ta_m
FR_m
Ta_r
102
104
116
106
108
114
110
12
14
Te_m
rat_m
112
103
Rat_max
Rat_min
ΔRat_max
ΔRat_min
107
100

FIG. 3

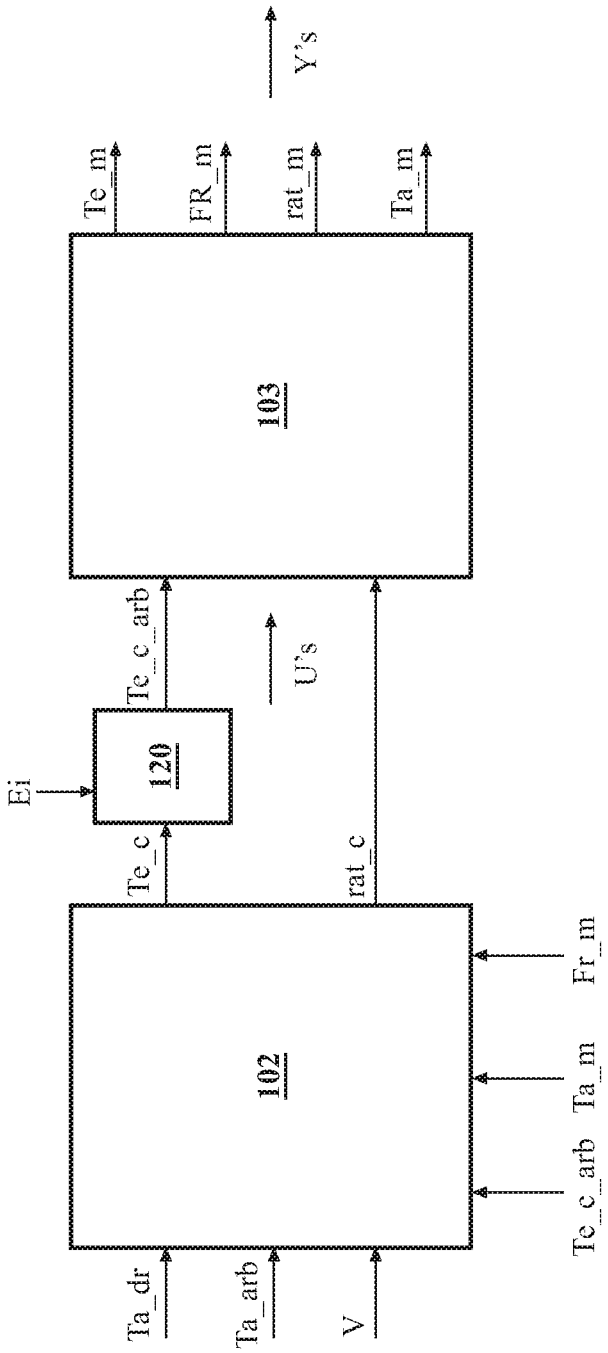
Ei
120
Te_c
Te_c_arb
102
103
U's
Y's
rat_c
Ta_dr
Ta_arb
V
Te_c_arb
Ta_m
Fr_m
Te_m
FR_m
rat_m
Ta_m

FIG. 4

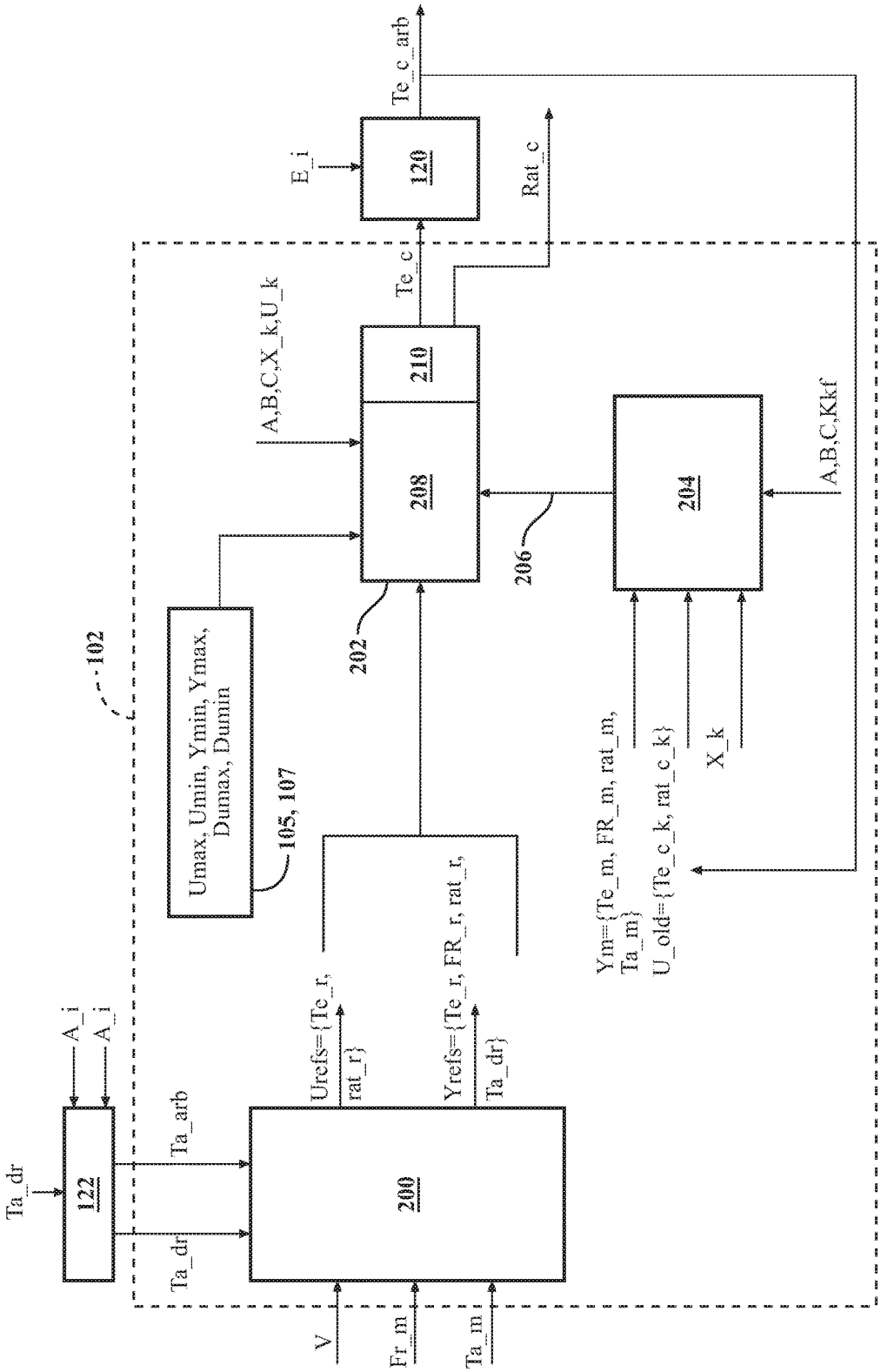
Te_c_arb
E_i
120
Rat_c
Te_c
A,B,C,X_k,U_k
210
208
206
204
A,B,C,Kkf
202
102
Umax, Umin, Ymin, Ymax, Dumax, Dumin
105, 107
Ym={Te_m, FR_m, rat_m, Ta_m}
U_old={Te_c_k, rat_c_k}
X_k
Urefs={Te_r, rat_r}
Yrefs={Te_r, FR_r, rat_r, Ta_dr}
A_i
A_i
Ta_dr
122
Ta_arb
Ta_dr
200
V
Fr_m
Ta_m

FIG. 5

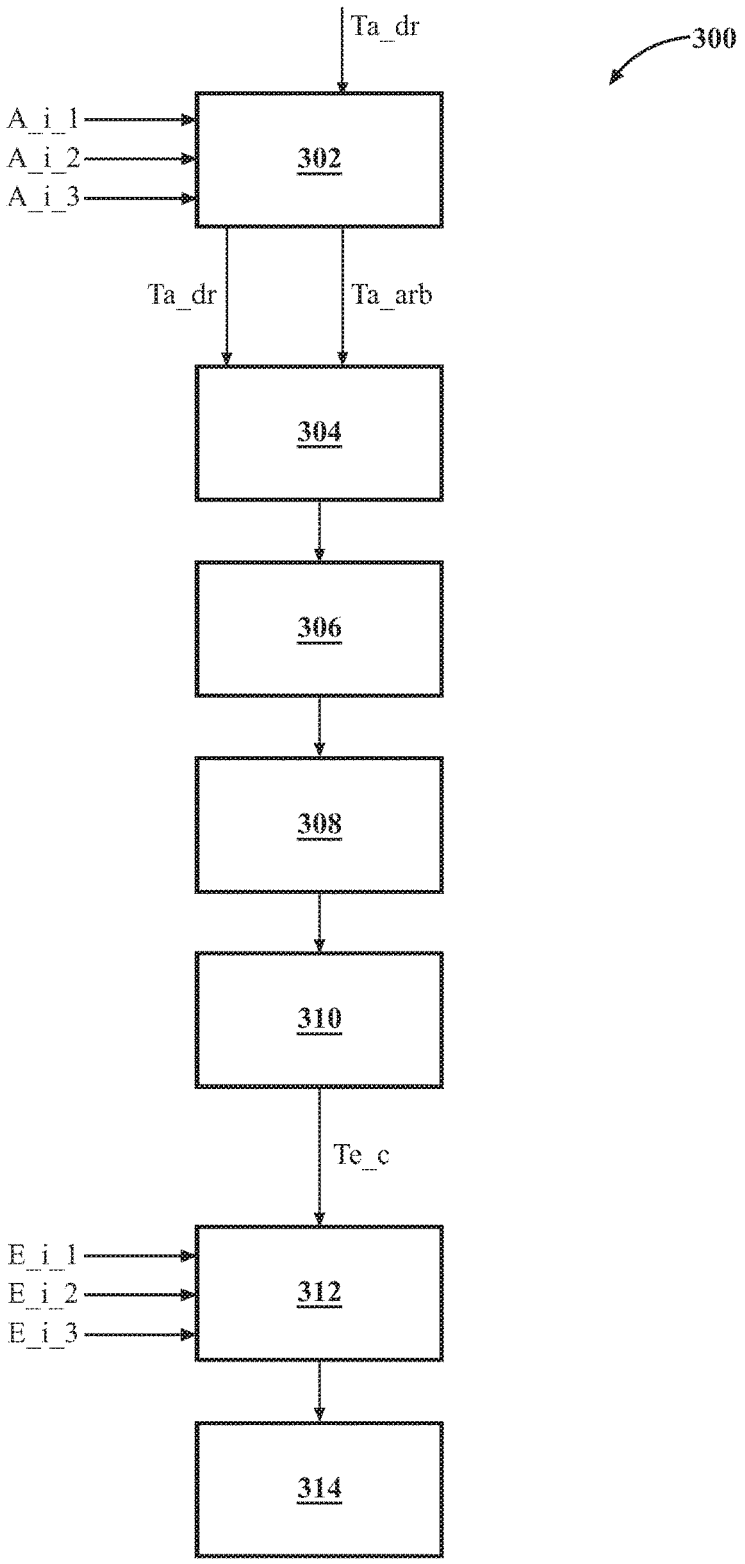
Ta_dr
300
A_i_1
A_i_2
A_i_3
302
Ta_dr
Ta_arb
304
306
308
310
Te_c
E_i_1
E_i_2
E_i_3
312
314

FIG. 6

COORDINATION OF TORQUE INTERVENTIONS IN MPC-BASED POWERTRAIN CONTROL

TECHNICAL FIELD

The disclosure relates to a control system and method for a propulsion system of a motor vehicle having an engine and a transmission, and more particularly to a control system and method that uses a multivariable controller.

INTRODUCTION

Propulsion system control in a motor vehicle generally involves reading driver and vehicle inputs, such as accelerator pedal position, vehicle sensor data, and torque requests, and communicating these inputs to an Engine Control Module (ECM) and a Transmission Control Module (TCM). The ECM may calculate a driver axle torque requested from the driver and vehicle inputs. The driver axle torque requested may then be communicated to the engine and to the ECM. The engine is controlled based on the desired driver axle torque to produce an actual axle torque. Meanwhile, and typically concurrently with calculating desired engine and axle torques, a desired speed or gear ratio is calculated from the desired axle torque and the vehicle speed. The desired gear ratio, or CVT pulley ratio, is then communicated to the transmission. The transmission is controlled based on the desired gear ratio (or CVT pulley ratio) to produce an actual gear or pulley ratio. The actual axle torque and the actual gear or pulley ratio define the operating conditions of the motor vehicle.

While this system of propulsion system control is useful for its intended purpose, there is room in the art for improvements that provide dynamic control of the axle torque to balance drivability, performance, and fuel economy, especially in propulsion systems having a continuously variable transmission. Engine control systems have been developed to control engine output torque to achieve a desired torque. Traditional engine control systems, however, may not control the engine output torque as accurately as desired. In addition, no traditional mechanism is known to exist that incorporates interventions from torque request overrides into an MPC-based control system.

SUMMARY

A method and system are provided to control a parameter, such as a vehicle acceleration, in a vehicle propulsion system while optimizing fuel economy, through the use of model predictive control. In some forms, model predictive control is used to coordinate the engine and transmission to improve fuel economy and drivability. Axle torque interventions and engine output torque interventions are incorporated into the MPC control system.

In one form, which may be combined with or separate from other forms disclosed herein, a method for controlling a propulsion system of a motor vehicle is provided. The method includes generating a plurality of sets of possible command values and determining a cost for each set of possible command values based on a first predetermined weighting value, a second predetermined weighting value, a plurality of predicted values, and a plurality of requested values. The method also includes determining which set of possible command values has a lowest cost and selecting the set of possible command values that has the lowest cost to define a set of selected command values. The method further

includes performing an arbitration step comprising at least one of the following arbitration procedures A and B: A) determining at least one requested value based on arbitrating between a driver requested value and an intervention requested value; and B) determining a desired command value by arbitrating between a selected command value of the set of selected command values and a command intervention value.

In another form, which may be combined with or separate from the other forms disclosed herein, a control system for a motor vehicle propulsion system having a transmission and an engine is provided. The control system includes a command generator module configured to generate a plurality of sets of possible command values and a cost module. The cost module is configured to determine a cost for each set of possible command values of the plurality of sets of possible command values based on a first predetermined weighting value, a second predetermined weighting value, a plurality of predicted values, and a plurality of requested values. The cost module is further configured to determine which set of possible command values of the plurality of sets of possible command values has a lowest cost. A selection module is configured to select the set of possible command values that has the lowest cost to define a set of selected command values. An arbitration module is included that is configured to perform at least one of the following arbitration procedures A and B: A) determine at least one requested value of the plurality of requested values based on arbitrating between a driver requested value and an intervention requested value; and B) determine a desired command value by arbitrating between a selected command value of the set of selected command values and a command intervention value.

In yet another form, which may be combined with or separate from the other forms disclosed herein, a propulsion system for a motor vehicle is provided. The propulsion system includes an engine operable to power the motor vehicle, the engine having an engine output shaft configured to transfer engine output torque. The propulsion system also includes a continuously variable transmission having a variator assembly including a first pulley and a second pulley. The first and second pulleys are rotatably coupled by a rotatable member, and at least one of the first and second pulleys includes a movable sheave translatable along an axis to selectively change a transmission ratio between the engine output shaft and a transmission output shaft. A drive axle is configured to be driven via the transmission output shaft, the drive axle being configured to output axle torque to a set of wheels. A control system is included, which has a prediction module configured to generate a plurality of predicted actual axle torque values and a plurality of predicted actual fuel consumption rate values based on a plurality of sets of possible command values. The plurality of sets of possible command values include a plurality of possible commanded transmission ratio values and a plurality of possible commanded engine torque values. A cost module is configured to determine a cost for each set of possible command values based on a predicted actual axle torque value of the plurality of predicted axle torque values, a predicted actual fuel consumption rate value of the plurality of predicted actual fuel consumption rate values, a first predetermined weighting value, a second predetermined weighting value, and a plurality of requested values. The plurality of requested values includes the driver axle torque requested, an engine output torque requested, a transmission ratio requested, and a fuel consumption rate requested. The cost module is further configured to determine which set of

possible command values has a lowest cost. A selection module is configured to select the set of possible command values that has the lowest cost to define a set of selected command value. An axle torque arbitration module is provided, which is configured to determine at least one requested value of the plurality of requested values based on arbitrating between a driver axle torque requested and an axle intervention requested value. An engine torque arbitration module is provided, which is configured to determine a desired command value by arbitrating between a selected engine torque command value of the set of selected command values and an engine torque command intervention value.

Additional features may be provided, including but not limited to the following: wherein performing the arbitration step comprises performing both of the arbitration procedures A and B; wherein the plurality of sets of possible command values includes a plurality of commanded engine output torque values; wherein the set of selected command values includes a selected engine output torque value; wherein the command intervention value includes an engine torque intervention value; the method further comprising generating a plurality of predicted actual axle torque values and a plurality of predicted actual fuel consumption rate values based on the plurality of sets of possible command values; the plurality of sets of possible command values including a plurality of possible transmission ratio command values; the method further comprising determining the cost for each set of possible command values further based on a predicted actual axle torque value of the plurality of predicted axle torque values and a predicted actual fuel consumption rate value of the plurality of predicted actual fuel consumption rate values; the plurality of requested values including a driver axle torque requested, an engine output torque requested, a transmission ratio requested, and a fuel consumption rate requested.

In addition, the method/control system may be configured to determine the plurality of predicted actual axle torque values and the plurality of predicted actual fuel consumption rate values with the following set of equations:

$$x_{k+1} = \left\{A * x_k + B * \begin{bmatrix} \text{Te\_c\_arb} \\ \text{Rat\_c}_k \end{bmatrix} + v\right\} + K_{KF} * \left(\begin{bmatrix} \text{Te\_m}_k \\ \text{FR\_m}_k \\ \text{Rat\_m}_k \\ \text{Ta\_m}_k \end{bmatrix} - \begin{bmatrix} \text{Te\_a}_k \\ \text{FR\_a}_k \\ \text{Rat\_a}_k \\ \text{Ta\_a}_k \end{bmatrix}\right)$$

$$\begin{bmatrix} \text{Ta\_a}_{k+1} \\ \text{FR\_a}_{k+1} \end{bmatrix} = C * x_{k+1} + w$$

where,

x_k, x_{k+1}=state estimates at time steps k and k+1 respectively;

A=a state (or transition) matrix;

B=an input matrix;

Te_c_arb=one of: engine output torque commanded at the prediction step k and an engine torque intervention value;

Rat_c_k=transmission ratio commanded at the prediction step k;

K_{KF}=a Kalman filter gain;

Te_a_k=predicted actual engine output torque at the prediction step k;

FR_a_k=predicted actual fuel consumption rate at the prediction step k;

Rat_a_k=predicted actual transmission ratio at the prediction step k;

Ta_a_k=predicted actual axle torque at the prediction step k;

Te_m_k=measured engine output torque at the prediction step k;

FR_m_k=measured fuel consumption rate at the prediction step k;

Rat_m_k=measured transmission ratio at the prediction step k;

Ta_m_k=measured axle torque at the prediction step k;

Ta_a_{k+1}=predicted actual axle torque at the prediction step k+1;

FR_a_{k+1}=predicted actual fuel consumption rate at the prediction step k+1;

C=an output (or measured) matrix;

v=process noise; and

w=measurement noise.

Further additional features may include the following: the method/control system being configured to determine that the desired command value is the engine torque intervention value after arbitrating between the selected command value of the plurality of selected command values and the engine torque intervention value; the method/control system being configured to determine that Te_c_arb is equal to the engine torque intervention value; determining the engine torque intervention value from among the following: a transmission torque reduction request, an engine overspeed request, a boost request, a speed control request, an engine crank shutdown ring request, a power take off ring request, an exhaust O2 sensor ring request, a torque cut off ring request, a hybrid torque request, and a power take off control request; the method and a steady state optimizer module of the control system being configured to determine an accelerator pedal position (PP), an engine speed (RPM), a vehicle speed (V), an air-fuel ratio (AF); the method and the steady state optimizer module being configured to determine the driver axle torque requested (Ta_dr) based on the accelerator pedal position (PP) and the vehicle speed (V), to determine an arbitrated axle torque requested (Ta_arb) by selecting a winner between the driver axle torque requested (Ta_dr) and the intervention requested value (A_i), to determine a transmission ratio requested (Rat_r) based on the arbitrated axle torque requested (Ta_arb) and the vehicle speed (V), to determine the engine output torque requested (Te_r) based on the arbitrated axle torque requested (Ta_arb), the transmission ratio requested (Rat_r), and a final drive ratio (FD), and/or to determine the fuel consumption rate requested (FR_r) based on the driver axle torque requested (Ta_dr), the vehicle speed (V), the engine speed (RPM), and the air-fuel ratio (AF); wherein the plurality of requested values includes the driver axle torque requested (Ta_dr), the fuel consumption rate requested (FR_r), the engine output torque requested (Te_r), and the transmission ratio requested (Rat_r).

Further additional features may also be provided, including by not limited to the following: the method/control system being configured to determining the (axle) intervention requested value from among the following: a brake torque management request, a vehicle overspeed condition request, a traction control request, a deceleration fuel cut off request, a shaping request, a chassis system request, a performance launch request, a four wheel drive request, and an emergency autonomous braking request; the plurality of selected command values including a selected transmission ratio command value; the method/control system being configured to control a vehicle parameter based on at least one of the desired command values; the arbitration module being an engine torque arbitration module configured to determine the desired command value by selecting a winner between the selected engine output torque value and the

engine torque intervention value; the control system further comprising an axle torque arbitration module configured to determine an arbitrated axle torque requested by selecting a winner between the driver axle torque requested and the intervention requested value; the control system further comprising a prediction module configured to generate a plurality of predicted actual axle torque values and a plurality of predicted actual fuel consumption rate values based on the plurality of sets of possible command values; the plurality of sets of possible command values including a plurality of possible transmission ratio command values and a plurality of possible engine torque command values; wherein the cost module is configured to determine the cost for each set of possible command values further based on a predicted actual axle torque value of the plurality of predicted axle torque values and a predicted actual fuel consumption rate value of the plurality of predicted actual fuel consumption rate values; the plurality of requested values including the driver axle torque requested, an engine output torque requested, a transmission ratio requested, and a fuel consumption rate requested; and wherein the engine torque arbitration module is configured to feed the arbitrated engine output torque commanded Te_c_arb back to the prediction module.

Additional features, aspects and advantages will become apparent by reference to the following description and appended drawings wherein like reference numbers refer to the same component, element or feature.

BRIEF DESCRIPTION OF THE DRAWINGS

The drawings described herein are for illustration purposes only and are not intended to limit the scope of the present disclosure in any way.

FIG. **1** is a schematic diagram of a motor vehicle having an exemplary propulsion system, in accordance with the principles of the present disclosure;

FIG. **2** is a schematic diagram showing a propulsion control system for use with the propulsion system shown in FIG. **1**, according to the principles of the present disclosure;

FIG. **3** is a schematic diagram of a control system for use with the propulsion control system shown in FIG. **2**, in accordance with the principles of the present disclosure;

FIG. **4** is a schematic diagram illustrating additional details of the control system shown in FIG. **3**, according to the principles of the present disclosure;

FIG. **5** is a schematic diagram illustrating additional details of a multivariable controller of the control system shown in FIGS. **3-4**, in accordance with the principles of the present disclosure; and

FIG. **6** is a block diagram illustrating a method for a controlling a vehicle propulsion system, according to the principles of the present disclosure.

DESCRIPTION

With reference to FIG. **1**, an exemplary motor vehicle is shown and generally indicated by reference number **9**. The motor vehicle **9** is illustrated as a passenger car, but it should be appreciated that the motor vehicle **9** may be any type of vehicle, such as a truck, van, sport-utility vehicle, etc. The motor vehicle **9** includes an exemplary propulsion system **10**. It should be appreciated at the outset that while a rear-wheel drive propulsion system **10** has been illustrated, the motor vehicle **9** may have a front-wheel drive propulsion system without departing from the scope of the present disclosure.

The propulsion system **10** generally includes an engine **12** interconnected with a transmission **14** and a final drive unit **16**. The engine **12** may be a conventional internal combustion engine or an electric engine, hybrid engine, or any other type of prime mover, without departing from the spirit and scope of the present disclosure. The engine **12** supplies a driving engine output torque to the transmission **14** via a crankshaft or engine output shaft **18**. The driving engine output torque may be transmitted through a flexplate and/or starting device **20** to the transmission **14**. The starting device **20** may be a hydrodynamic device, such as a fluid coupling or torque converter, a wet dual clutch, or an electric motor, by way of example. Torque is then transmitted from the starting device **20** to at least one transmission input shaft **22**.

The transmission **14** may be a stepped transmission having planetary gears, a countershaft transmission, a continuously variable transmission, or an infinitely variable transmission. Torque from the transmission input shaft **22** is communicated through a ratio control unit **24** to a transmission output shaft **26**. Generally, the ratio control unit **24** provides a plurality of forward or reverse speed or gear ratios, or an infinite number of forward or reverse speed or gear ratios, between the transmission input shaft **22** and the transmission output shaft **26**.

Where the transmission **14** is a continuously variable transmission, the ratio control unit **24** may include a variator assembly **24*a*** having first and second pulleys **24*b***, **24*c*** that are rotatably coupled by an endless rotatable member **24*d*** wrapped around the variable diameter pulleys **24*b***, **24*c***. At least one of the first and second pulleys **24*b***, **24*c*** includes a movable sheave **24*e*** translatable along an axis to selectively change a gear ratio between the engine output shaft **18** and the transmission output shaft **26**.

The transmission output shaft **26** communicates output torque to the final drive unit **16**. The final drive unit **16** generally includes a differential **28** that transfers axle torque through drive axles **30** to drive wheels **32**.

Turning now to FIG. **2**, a vehicle propulsion control system for use with the exemplary propulsion system **10** is generally indicated by reference number **34**. The vehicle propulsion control system **34** includes a supervisory control module **36** in electronic communication with an engine control module **38** and a transmission control module **40**. The modules **36**, **38**, and **40** may communicate through a vehicle network or cable area network (CAN) bus. The vehicle propulsion control system **34** may include or communicate with various other control modules, such as a body control module or infotainment control module. Alternatively, the supervisory control module **36** may be subsumed within the engine control module **38** or transmission control module **40**.

The supervisory control module **36** is a non-generalized, electronic control device having a preprogrammed digital computer or processor **42**, memory or non-transitory computer readable medium **44** used to store data such as control logic, instructions, image data, lookup tables, etc., and a plurality of input/output peripherals or ports **46**. The processor **42** is configured to execute the control logic or instructions.

The engine control module **38** is a non-generalized, electronic control device having a preprogrammed digital computer or processor **48**, memory or non-transitory computer readable medium **50** used to store data such as control logic, instructions, image data, lookup tables, etc., and a plurality of input/output peripherals or ports **52**. The processor **48** is configured to execute the control logic or

instructions. The engine control module **38** communicates with, and controls, the engine **12**.

The transmission control module **40** is a non-generalized, electronic control device having a preprogrammed digital computer or processor **54**, memory or non-transitory computer readable medium **56** used to store data such as control logic, instructions, image data, lookup tables, etc., and a plurality of input/output peripherals or ports **58**. The processor **54** is configured to execute the control logic or instructions. The transmission control module **40** communicates with, and controls, the transmission **14**.

The vehicle propulsion control system **34** communicates with a plurality of sensors connected to the propulsion system **10** including an air flow sensor S**2** in the engine **12**, an engine speed sensor S**4**, a transmission input shaft speed sensor S**6**, a transmission output shaft speed sensor S**8**, a vehicle speed sensor S**10**, and a pedal position sensor S**12**. The air flow sensor S**2** and the engine speed sensor S**4** communicate with the engine control module **38**. The transmission input shaft speed sensor S**6** and the transmission output shaft speed sensor S**8** communicate with the transmission control module **40**. The vehicle speed sensor S**10** and the pedal position sensor S**12** communicate with both the engine control module **38** and the transmission control module **40**.

With reference to FIG. **3**, and continued reference to FIGS. **1** and **2**, a control diagram for the vehicle propulsion control system **34** is illustrated. The control diagram illustrates a control system or method **100** for controlling a parameter, such as vehicle acceleration, while optimizing fuel economy, which utilizes a multivariable controller. The control system **100** includes a multivariable controller **102** and a plant **103** that is controlled by the multivariable controller **102**. The multivariable controller **102** may iteratively control an engine output torque Te **104** and a transmission ratio Rat **106** to optimize a fuel consumption rate FR and to achieve a desired axle torque Ta. The axle torque Ta is the amount of torque at the vehicle axle **30**. Inputs to the multivariable controller **102** include a measured actual axle torque Ta_m, a measured fuel consumption rate FR_m, and an axle torque requested Ta_r, which may be based on driver and vehicle inputs and/or an axle torque intervention, which will be discussed in further detail below.

The control system **100** may include an engine torque controller **108**, a transmission ratio controller **110** (which may be a variator controller for CVTs), a vehicle dynamics module **112**, and an engine mode control module **114** that receives an engine mode signal **116** from the multivariable controller **102**. The engine mode control module **114** may be used to control active fuel management, such as cylinder deactivation, or variable valve lift, by way of example. In some examples, the multivariable controller **102** is stored and executed by the supervisory control module **36**, the engine torque controller **108** and the engine mode control module **114** are stored and executed by the engine control module **38**, and the transmission ratio controller **110** is stored and executed by the transmission control module **40**. The vehicle dynamics module **112** may be stored and executed by the engine control module **38**, the transmission control module **40**, or any other control module or a combination of control modules.

The multivariable controller **102** may optionally receive system limitations **105** from the engine controller **108** including a maximum engine output torque Te_{max}, a minimum engine output torque Te_{min}, a maximum rate of change of engine output torque ΔTe_{max}, and a minimum rate of change of engine output torque ΔTe_{min}. The multivariable controller **102** may also optionally receive system limitations **107** from the transmission ratio controller **110** including a maximum transmission ratio Rat_{max}, a minimum transmission ratio Rat_{min}, a maximum rate of change of transmission ratio ΔR_{max}, and a minimum rate of change of transmission ratio ΔR_{min}.

Referring now to FIG. **4**, another representation of the control system **100** is illustrated, showing inputs and outputs to the multivariable controller **102** and the plant **103** controlled by the multivariable controller **102**. For example, inputs to the multivariable controller **102** may include a driver axle torque requested Ta_dr, an arbitrated axle torque requested Ta_arb (which may or may not be equal to Ta_dr, as explained in further detail below) as well as vehicle speed V. Feedback inputs of axle torque measured Ta_m, fuel consumption rate measured FR_m, and arbitrated engine torque commanded Te_c_arb may also be input to the multivariable controller **102**. Outputs of the multivariable controller **102** may include an engine output torque commanded Te_c and a transmission ratio commanded Rat_c. These controlled outputs, or "u" variables (Te_c and Rat_c), of the multivariable controller **102** may be inputs to the plant **103**, which includes the engine **12** and transmission **14**. However, in some variations, the engine output torque commanded Te_c is first output to an engine arbitration module **120** to determine whether any other engine torque interventions E_i should be allowed to control the engine output torque commanded. As is explained in further detail below, the engine torque arbitration module **120** outputs an arbitrated engine output torque commanded Te_c_arb to the plant **103**, which may be equal to the selected engine output torque commanded Te_c or another engine output torque based on one of the intervention inputs E_i.

The arbitrated engine output torque commanded Te_c_arb is used to control the engine **12** to result in an actual engine output torque, which is the measured engine output torque Te_m. The transmission ratio commanded Rat_c is used to control the transmission **14** to provide an actual measured gear ratio or pulley ratio Rat_m between the transmission input shaft **22** and the transmission output shaft **26**. Thus, the plant **103** outputs the "y" variables, the values that may be tracked, which may include actual measured engine torque Te_m, actual measured fuel consumption rate FR_m, actual measured transmission ratio (or pulley ratio) Rat_m, and actual measured axle torque Ta_m.

Referring now to FIG. **5**, additional details of the multivariable controller **102** are illustrated, as well as details regarding an axle arbitration module **122** and the engine torque arbitration module **120**. The axle arbitration module **122** may be included as part of the multivariable controller **102** or as part of another controller. The axle arbitration module **122** is configured to consider multiple axle torque requests from driver and vehicle sources, and decide which of the axle torque requests should be input to the multivariable controller **102** to be used as the axle torque requested Ta. For example, one input to the axle arbitration module **122** is a driver axle torque requested Ta_dr, which is a function of accelerator pedal position and vehicle speed. More particularly, the driver axle torque requested Ta_dr may be determined based on the accelerator pedal position PP and the vehicle speed V with a relationship such as

$$Ta\_dr = f(PP, V). \quad (1)$$

In some examples, the driver axle torque requested Ta_dr may be determined from a lookup table or **2**D map from a

vehicle speed V sensed by vehicle speed sensor S**10** and an accelerator pedal position PP sensed by the pedal position sensor S**12**.

A plurality of axle torque intervention requested values A_i are also input to the axle arbitration module **122**, as they occur under certain driving conditions. These axle torque intervention requested values A_i may include, for example, a brake torque management (BTM) request, a vehicle overspeed condition request, a traction control (TC) request, a deceleration fuel cut off request, a shaping request, a chassis system request, a performance launch request, a four wheel drive request, and an emergency autonomous braking request. The axle arbitration module **122** is configured to determine whether any of the intervention requested values A_i may be allowed to override the driver axle torque requested Ta_dr. The axle arbitration module **122** chooses a "winner" by selecting between, or arbitrating between, the driver axle torque requested Ta_dr and any intervention requested values A_i. The winner of the arbitration is output from the axle arbitration module **122** as the arbitrated axle torque requested Ta_arb to a steady state optimizer module **200**. The axle arbitration module **122** also outputs the driver axle torque requested Ta_dr to the steady state optimizer module **200**.

The steady state observer module **200** is a reference generator that is included as part of the multivariable controller **102**. The steady state observer module **200** determines reference values (desired or requested values) for the "u" variables (controlled variables) and the "y" variables (the optimized output variables that may be tracked). For example, the steady state optimizer module **200** is configured to determine an engine output torque requested Te_r, a transmission ratio requested Rat_r, a fuel consumption rate requested FR_r, and to output the driver axle torque requested Ta_dr. The steady state optimizer module **200** may also output the arbitrated axle torque requested Ta_arb, in some example. (In some forms, the axle arbitration module **122** may be included as part of the steady state optimizer module **200**).

The u_{refs} include the engine output torque requested Te_r and the transmission ratio requested Rat_r, while the y_{refs} may include all four of the engine output torque requested Te_r, the transmission ratio requested Rat_r, the fuel consumption rate requested FR_r, and the driver axle torque requested Ta_dr (and in some cases, the arbitrated axle torque requested Ta_arb). The u_{refs} and the y_{refs} are values that are desirable during a steady state. The MPC module **202**, described below, optimizes the trajectory, particularly of the fuel consumption rate FR, during the transient from one steady state to another.

The fuel consumption rate requested FR_r may be determined based on the driver axle torque requested Ta_dr, the vehicle speed V, the engine speed RPM, and the air-fuel ratio AF. For example,

$$FR\_r = f(Ta\_dr, V, \mathrm{RPM}, \mathrm{AF}). \tag{2}$$

The engine speed RPM may be determined from the engine speed sensor S**4**. The air-fuel ratio AF is the ratio of the mass of air to the mass of fuel, which may be reported by a fuel control module, by way of example.

The transmission ratio requested Rat_r may be determined based on the arbitrated axle torque requested Ta_arb and the vehicle speed V. For example,

$$\mathrm{Rat\_}r = f(Ta\_arb, V). \tag{3}$$

Again, Ta_arb may be equal to the driver axle torque requested Ta_dr if the axle arbitration module **122** determines that the driver axle torque requested Ta_dr should win the arbitration or if the axle arbitration module **122** determines that, even though one of the intervention requested values A_i should win the arbitration, the intervention requested value A_i should not be allowed to alter the axle torque requested Ta used to determine the transmission ratio requested Rat_r, and therefore, the axle torque requested should remain as the driver axle torque requested Ta_dr to be used to determine the transmission ratio requested Rat_r.

The engine output torque requested Te_r may be determined based on the arbitrated axle torque requested Ta_arb, the transmission ratio requested Rat_r, and the final drive ratio FD (which is constant for a given vehicle). For example,

$$\mathrm{Te\_r} = \frac{\mathrm{Ta\_arb} + \mathrm{Loss}}{\mathrm{Rat\_r} * FD}. \tag{4}$$

The "loss" factor may encompass mechanical losses, such as friction and pulley clamping losses, by way of example. As with computing the transmission ratio requested Rat_r, when computing the engine output torque requested Te_r, Ta_arb may equal to be the driver axle torque requested Ta_dr if the axle arbitration module **122** determines that the driver axle torque requested Ta_dr should win the arbitration or if the axle arbitration module **122** determines that, even though one of the intervention requested values A_i should win the arbitration, the intervention requested value A_i should not be allowed to alter the axle torque requested Ta used to determine the engine output torque requested Te_r, and therefore, the axle torque requested should remain as the driver axle torque requested Ta_dr to be used to determine the engine output torque requested Te_r.

Once the requested values, or reference values, are determined, the steady state optimizer module **200** outputs them (the u_refs and the y_refs) to the MPC module **202**. The MPC module **202** uses model predictive control and may also be referred to as a quadratic programming solver, such as a Dantzig QP solver.

A prediction module **204** is configured to predict at least an actual axle torque and an actual fuel consumption rate for use in the MPC module **202**. The prediction module **204** may also be referred to as a state observer, which uses a Kalman filter. The predicted actual values **206** are output from the prediction module **204** to the MPC module **202**.

The prediction module **204** is configured to generate a plurality of predicted actual axle torques and fuel consumption rates. For example, the prediction module generates at least a first predicted actual axle torque and a first predicted actual fuel consumption rate based on a first set of possible command values (which may be generated, for example, by a command generator module formed as part of the prediction module **204** or the MPC module **202**), where the first set of possible command values includes a first commanded engine output torque Te_c and a first commanded transmission ratio Rat_c. The prediction module **204** is further configured to generate at least a second predicted actual axle torque and a second predicted actual fuel consumption rate based on a second set of possible command values, where the second set of possible command values includes a second commanded engine output torque Te_c and a second commanded transmission ratio Rat_c. In practice, a much larger number of predicted values may be generated based on additional sets of possible command values (third, fourth,

fifth, etc. sets of possible Te_c and Rat_c values). The predicted actual values **206** are output to the MPC module **202**.

As will be discussed in further detail below, the engine torque commanded Te_c that is input to the prediction module **204** may, in some circumstances, include an arbitrated engine torque commanded Te_c_arb.

The MPC module **202** contains a cost module **208** that is configured to determine a first cost for the first set of possible command values Te_c, Rat_c based on at least first and second predetermined weighting values, the first predicted actual axle torque, the first predicted actual fuel consumption rate, the driver axle torque requested Ta_dr, the engine output torque requested Te_r, the transmission ratio requested Rat_r, and the fuel consumption rate requested FR_r. Similarly, the cost module **208** is configured to determine a second cost for the second set of possible command values Te_c, Rat_c based on at least the first and second predetermined weighting values, the second predicted actual axle torque, the second predicted actual fuel consumption rate, the driver axle torque requested Ta_dr, the engine output torque requested Te_r, the transmission ratio requested Rat_r, and the fuel consumption rate requested FR_r. Likewise, many more additional costs may be determined based on additional sets of predicted values and command values, in order to optimize for the lowest cost.

The MPC module **202** may also include a selection module **210** configured to select one of the plurality of sets of possible command values Te_c, Rat_c based on the lowest of the determined costs and set a selected engine output torque Te_c and a selected transmission ratio Rat_c equal to, or based on, the possible command values Te_c, Rat_c of the selected one of the plurality of possible sets.

The cost module **202** may be configured to determine the plurality of costs, with the following cost equation (5):

$$\text{Cost} = \sum (y(i|k) - y_{ref})^T Q_Y (y(i|k) - y_{ref}) + (u(i|k) - u_{ref})^T Q_U (u(i|k) - u_{ref}) + \Delta u(i|k)^T Q_{\Delta u} \Delta u(i|k) \tag{5}$$

$$y = \begin{bmatrix} \text{Te\_a} \\ \text{FR\_a} \\ \text{Rat\_a} \\ \text{Ta\_a} \end{bmatrix}$$

$$y_{ref} = \begin{bmatrix} \text{Te\_r} \\ \text{FR\_r} \\ \text{Rat\_r} \\ \text{Ta\_dr} \end{bmatrix}$$

$$u = \begin{bmatrix} \text{Te\_c} \\ \text{Rat\_c} \end{bmatrix}$$

$$u_{ref} = \begin{bmatrix} \text{Te\_r} \\ \text{Rat\_r} \end{bmatrix}$$

where Te_a=predicted actual engine output torque; FR_a=predicted actual fuel consumption rate; Rat_a=predicted actual transmission ratio; Ta_a=predicted actual axle torque; Te_r=engine output torque requested; FR_r=fuel consumption rate requested; Rat_r=transmission ratio requested; Ta_dr=driver axle torque requested; Te_c=commanded engine output torque; Rat_c=commanded transmission ratio; Q_y=a first predetermined weighting value; Q_u=a second predetermined weighting value; $Q_{\Delta u}$=a third predetermined weighting value; i=index value; k=prediction step; and T=transposed vector. In this case, there are two values for the "u" variables, u_1 and u_2, such that i=1, 2, and there may be four values for the "y" variables, y_1, y_2, y_3, y_4, such that i=1, 2, 3, 4. As explained above, the y_{ref} and u_{ref} values may be determined by the steady state optimizer module **200**.

The plurality of costs may be determined even more particularly with the following equation (6), which is an MPC equation having a prediction horizon of three and a control horizon of two:

$$\begin{aligned}\text{Cost}=\{&\lambda_a*(Ta\_a_k-Ta\_dr)^2+\lambda_a*(Ta\_a_{k+1}-Ta\_dr)^2+\lambda_a*(Ta\_a_{k+2}-Ta\_dr)^2\}+\{\lambda_f*(FR\_a_k-FR\_r)^2+\lambda_f*(FR\_a_{k+1}-FR\_r)^2+\lambda_f*(FR\_a_{k+2}-FR\_r)^2\}+\{\lambda_e*(Te\_c_k-Te\_r)^2+\lambda_e*(Te\_c_{k+1}-Te\_r)^2\}+\{\lambda_r*(\text{Rat}\_c_k-Rat\_r)^2+\lambda_r*(\text{Rat}\_c_{k+1}-Rat\_r)^2\}+\{\lambda_{\Delta r}*(\Delta\text{Rat}\_c_k)^2+\lambda_{\Delta r}*(\Delta\text{Rat}\_c_{k+1})^2\}+\{\lambda_{\Delta e}*\Delta Te\_c_k)^2+\lambda_{\Delta e}*(\Delta Te\_c_{k+1})^2\}\end{aligned} \tag{6}$$

where λ_a=a first predetermined weighting value; Ta_a_k=predicted actual axle torque at a prediction step k; Ta_dr=driver axle torque requested; Ta_a_{k+1}=predicted actual axle torque at a prediction step k+1; Ta_a_{k+2}=predicted actual axle torque at a prediction step k+2; λ_f=a second predetermined weighting value; FR_a_k=predicted actual fuel consumption rate at the prediction step k; FR_r=fuel consumption rate requested; FR_a_{k+1}=predicted actual fuel consumption rate at the prediction step k+1; FR_a_{k+2}=predicted actual fuel consumption rate at the prediction step k+2; λ_e=a third predetermined weighting value; Te_c_k=engine output torque commanded at the prediction step k; Te_r=engine output torque requested; Te_c_{k+1}=engine output torque commanded at the prediction step k+1; λ_r=a fourth predetermined weighting value; Rat_c_k=transmission ratio commanded at the prediction step k; Rat_r=transmission ratio requested; Rat_c_{k+1}=transmission ratio commanded at the prediction step k+1; $\lambda_{\Delta r}$=a fifth predetermined weighting value; ΔRat_c_k=change in transmission ratio commanded at the prediction step k; ΔRat_c_{k+1}=change in transmission ratio commanded at the prediction step k+1; $\lambda_{\Delta e}$=a sixth predetermined weighting value; ΔTe_c_k=change in engine output torque commanded at the prediction step k; and ΔTe_c_{k+1}=change in engine output torque commanded at the prediction step k+1. The prediction step k is the prediction at a current step, the prediction step k+1 is a prediction one step ahead, and the prediction step k+2 is a prediction two steps ahead. As explained above, the y_{ref} and u_{ref} values may be determined by the steady state optimizer module **200**.

The cost equation (e.g., equation (5) or (6)) may be applied iteratively to arrive at the lowest cost for a plurality of sets of possible command values Te_c, Rat_c, where the plurality of sets of possible command values Te_c, Rat_c include the first and second sets of possible command values as well as a number of other possible sets of command values for Te_c, Rat_c. Then, the selection module **210** may select the set of possible command values Te_c, Rat_c of the plurality of command values having the lowest cost, where the set of possible command values Te_c, Rat_c having the lowest cost may be defined as the selected set, including the selected transmission ratio Rat_c and the selected engine output torque Te_c. Similarly, the cost module **208** may generate a surface representing the cost of possible sets of command values Te_c, Rat_c. The cost module **208** and/or the selection module **210** may then identify the possible set that has the lowest cost based on the slope of the cost surface.

The prediction module **204** may provide a number of predicted actual values **206** to the MPC module **202** for use

in the cost equation (e.g., equation (5) or (6)) by the cost module **208**. The prediction module **204** may use equations such as the following to determine the predicted actual values **206**:

$$y_k = C * x_k \tag{7}$$

$$y_{k+1} = C * x_{k+1} + w \tag{8}$$

$$x_{k+1} = A * x_k + B * u_k + v + K_{KF} * (y_k - y_{mk}) \tag{9}$$

$$y = \begin{bmatrix} \text{Te\_a}_k \\ \text{FR\_a}_k \\ \text{Rat\_a}_k \\ \text{Ta\_a}_k \end{bmatrix}$$

$$y_{k+1} = \begin{bmatrix} \text{Te\_a}_{k+1} \\ \text{FR\_a}_{k+1} \\ \text{Rat\_a}_{k+1} \\ \text{Ta\_a}_{k+1} \end{bmatrix}$$

$$u_k = \begin{bmatrix} \text{Te\_c}_k, \text{Te\_c\_arb} \\ \text{Rat\_c}_k \end{bmatrix}$$

$$y_{mk} = \begin{bmatrix} \text{Te\_a\_m}_k \\ \text{FR\_a\_m}_k \\ \text{Rat\_a\_m}_k \\ \text{Ta\_a\_m}_k \end{bmatrix}$$

where A=a state (or transmission) matrix; B=an input matrix; C=an output (or measured) matrix; Te_a_k=predicted actual engine output torque at the prediction step k; FR_a_k=predicted actual fuel consumption rate at the prediction step k; Rat_a_k=predicted actual transmission ratio at the prediction step k; Ta_a_k=predicted actual axle torque at the prediction step k; x_k=state variable at a prediction step k; Te_a_{k+1}=predicted actual engine output torque at the prediction step k+1; FR_a_{k+1}=predicted actual fuel consumption rate at the prediction step k+1; Rat_a_{k+1}=predicted actual transmission ratio at the prediction step k+1; Ta_a_{k+1}=predicted actual axle torque at the prediction step k+1; x_{k+1}=state variable at a prediction step k+1; Te_c_k=engine output torque commanded at the prediction step k, which could be substituted by Te_c_arb=arbitrated engine output torque commanded; Rat_c_k=transmission ratio commanded at the prediction step k; K_{KF}=a Kalman filter gain; Te_a_m_k=measured engine output torque at the prediction step k; FR_a_m_k=measured fuel consumption rate at the prediction step k; Rat_a_m_k=measured transmission ratio at the prediction step k; Ta_a_m_k=measured axle torque at the prediction step k; v=process noise; and w=measurement noise. The prediction step k is a prediction step at the current time (e.g., now), and the prediction step k+1 is a prediction one step ahead.

Measured engine output torque Te_a_m may be sensed from the engine torque sensor S**4**. The measured transmission ratio, or pulley ratio, Rat_a_m may be determined from the speed of the transmission input shaft **22** sensed by the transmission input shaft speed sensor S**6** and the speed of the transmission output shaft **26** sensed by the transmission output shaft speed sensor S**8**, and may be provided by the TCM **40**.

Ta_a_{k+1} and FR_a_{k+1} may be defined as or equal to the first predicted actual axle torque and the first predicted actual fuel consumption rate, respectively, when generated based on the first set of possible command values for Te_c_k and Rat_c_k, and Ta_a_{k+1} and FR_a_{k+1} may be defined as or equal to the second predicted actual axle torque and the second predicted actual fuel consumption rate, respectively, when generated based on the second set of possible command values for Te_c_k and Rat_c_k, and so on.

The cost equation (e.g., equation (5) or (6)) may be subject to the following constraints **105**, **107**:

$$Te_{min} \le Te\_c_k \le Te_{max};$$

$$Te_{min} \le Te\_c_{k+1} \le Te_{max};$$

$$\text{Rat}_{min} \le \text{Rat\_}c_k \le \text{Rat}_{max};$$

$$\text{Rat}_{min} \le \text{Rat\_}c_{k+1} \le \text{Rat}_{max};$$

$$\Delta\text{Rat\_}c_{min} \le \Delta\text{Rat\_}c_k \le \Delta\text{Rat\_}c_{max};$$

$$\Delta\text{Rat\_}c_{min} \le \Delta\text{Rat\_}c_{k+1} \le \Delta\text{Rat\_}c_{max};$$

$$\Delta Te\_c_{min} \le \Delta Te\_c_k \le \Delta Te\_c_{max}; \text{ and}$$

$$\Delta Te\_c_{min} \le \Delta Te\_c_{k+1} \le \Delta Te\_c_{max},$$

where Te_{min}=a minimum possible engine output torque, Te_{max}=a maximum possible engine output torque, Rat_{min}=a minimum possible transmission ratio, Rat_{max}=a maximum possible transmission ratio, $\Delta\text{Rat\_c}_{min}$=a minimum possible rate of change in transmission ratio; $\Delta\text{Rat\_c}_{max}$=a maximum possible rate of change in transmission ratio, $\Delta\text{Te\_c}_{min}$=a minimum possible rate of change in engine output torque, and $\Delta\text{Te\_c}_{max}$=a maximum possible rate of change in engine output torque, where the constraints **105**, **107** may be provided by the ECM **38** and the TCM **40**, by way of example.

The constants, matrices, and gain referred to above, including A, B, C, K_{KF}, Q_y, Q_u, $Q_{\Delta u}$, λ_a, λ_f, λ_e, λ_r, $\lambda_{\Delta e}$, $\lambda_{\Delta r}$, are parameters of the system determined through testing, physical models, or other means. In some variations, a system identification procedure is run offline, for example, during a calibration, to identify the constants, matrices, and gain, and also to define u_0 and y_0. Once u_0 and y_0 are known, then x_0 can be computed from the prediction module equations (e.g., equations (7)-(9) or a subset thereof). Thereafter, each of the prediction module **204** and MPC module **202** equations (e.g., equations (5)-(9) or a subset thereof) can be run to obtain initial values offline. Then, the control system **102** can be run online to constantly optimize the controlled parameters Te_c and Rat_c as the vehicle **9** is running through steady state and transient states. The constants allow the cost to be determined based on the relationship between and relative importance of each of the commanded values Te_c, Rat_c and tracked values (e.g., FR_a, Ta_a, Rat_a, Te_a). The relationships are weighted to control the effect that each relationship has on the cost.

In some forms, the MPC module **202** may generate the possible sets of command values Te_c, Rat_c by determining possible sequences, sets, or a surface containing the command values Te_c, Rat_c that could be used for N future control loops. The prediction module **204** may determine predicted responses to the possible sets of the command values Te_c, Rat_c using the prediction module equations (e.g., equations (7)-(9) or a subset thereof). For example, the prediction module **204** may determine a set of predicted actual axle torques Ta_a and a set of predicted actual fuel consumption rates FR_a for N control loops.

More particularly, a set of N values for each command value Te_c, Rat_c may be determined, and a set of M values

for each predicted actual value Ta_a, FR_a may be determined based on the N command values Te_c, Rat_c. The cost module **208** may then determine the cost value for each of the possible sets of command values Te_c, Rat_c based on the predicted actual parameters Ta_a, FR_a (which may include Ta_a_k, Ta_a_{k+1}, Ta_a_{k+2}, FR_a_k, FR_a_{k+1}, and FR_a_{k+2}, depending on the particular cost equation (5), (6) used). The selection module **210** may then select one of the possible sets of the command values Te_c, Rat_c based on the costs of the possible sets, respectively. For example, the selection module **210** may select the possible set of command values Te_c, Rat_c having the lowest cost while satisfying the system constraints **105**, **107** (e.g., $Te_{min}<Te\_c_k<Te_{max}$; $Te_{min}<Te\_c_{k+1}<Te_{max}$; $Rat_{min}<Rat\_c_k<Rat_{max}$; $Rat_{min}<Rat\_c_{k+1}<Rat_{max}$; $\Delta Te\_c_{min}<\Delta Te\_c_k<\Delta Te\_c_{max}$; $\Delta Te\_c_{min}<\Delta Te\_c_{k+1}<\Delta Te\_c_{max}$; $\Delta Rat\_c_{min}<\Delta Rat\_c_k<\Delta Rat\_c_{max}$; $\Delta Rat\_c_{min}<\Delta Rat\_c_{k+1}<\Delta Rat\_c_{max}$).

In some forms, satisfaction of the constraints **105**, **107** may be considered in the cost determination. For example, the cost module **208** may determine the cost values further based on the constraints **105**, **107**, and the selection module **210** may select the possible set of command values Te_c, Rat_c that best achieves the axle torque request Ta while minimizing fuel consumption rate FR that has been determined to comply with the constraints **105**, **107**.

During steady-state operation, the command values Te_c, Rat_c may settle at or near the reference, or requested, values Te_r, Rat_r, respectively. During transient operation, however, the MPC module **202** may adjust the command values Te_c, Rat_c away from the reference values Te_r, Rat_r in order to best achieve the torque request Ta_arb, while minimizing the fuel consumption rate FR and satisfying the constraints **105**, **107**.

In operation, the MPC module **202** may determine the cost values for the possible sets of controlled and predicted values (u, y). The MPC module **202** may then select the one of the possible sets having the lowest cost. The MPC module **202** may next determine whether the selected possible set satisfies the constraints **105**, **107**. If so, the possible set may be defined as the selected set. If not, the MPC module **202** determines the set with the lowest cost that satisfies the constraints **105**, **107** and defines that set as the selected set.

The selected Rat_c command value is output from the MPC module **202** to the plant **103** (see FIG. **4**). The selected engine output torque Te_c, however, may undergo another procedure before being output to the plant **103**.

More particularly, the MPC module **202** outputs the selected engine output torque Te_c from the selection module **210** to the engine torque arbitration module **120**. The engine torque arbitration module **120** may be included as part of the multivariable controller **102**, if desired.

The engine output torque arbitration module **120** is configured to consider multiple engine torque requests from driver and vehicle sources, and decide which of the engine output torque requests should be used for a final engine torque request signal. For example, one input to the engine torque arbitration module **120** is the selected engine output torque Te_c from the MPC module of the controller **102**.

A plurality of engine torque intervention commanded values E_i are also input to the engine torque arbitration module **120**. These engine output torque intervention commanded values E_i may include, for example, a transmission torque reduction request, an engine overspeed request, a boost request, a speed control request, an engine crank shutdown ring request, a power take off ring request, an exhaust O2 sensor ring request, a torque cut off ring request, a hybrid torque request, and a power take off control request.

The engine output torque arbitration module **120** is configured to determine whether any of the engine output torque intervention commanded values E_i may be allowed to override the MPC-selected engine output torque commanded Te_c. The engine output torque arbitration module **120** chooses a "winner" by selecting between, or arbitrating between, the MPC-selected engine output torque commanded Te_c and any engine output torque intervention commanded values E_i. The winner of the arbitration is output from the engine torque arbitration module **120** as the arbitrated engine output torque commanded Te_c_arb to control the final engine output torque request signal.

The engine torque arbitration module **120** also outputs the arbitrated engine output torque commanded Te_c_arb back to the multivariable controller **102**, and more particular, to the prediction module **204** to affect future iterations of the MPC module **202**. As explained above, Te_c_arb is input in place of Te_c k to the prediction module **204**.

Even if Te_c_arb is chosen by the engine torque arbitration module **120** from one of the engine output torque intervention commanded values E_i, the MPC module **202** continues to run, but is overwritten by the Te_c_arb value selected by the engine torque arbitration module **120** to send to an actuator for controlling engine output torque.

Te_c_arb may be the MPC-selected engine output torque Te_c if the engine torque arbitration module **120** determines that the MPC-selected engine output torque Te_c should win the arbitration or if the engine torque arbitration module **120** determines that, even though one of the engine output torque intervention commanded values E_i should win the arbitration, the engine output torque intervention commanded values E_i should not be allowed to alter the engine output torque requested Te used to control actual engine output torque, and the engine output torque commanded should remain as the MPC-selected engine output torque Te_c.

The MPC module **202** may then output the arbitrated engine output torque value Te_c_arb and the selected transmission ratio commanded Rat_c to the plant **103**. The multivariable controller **102** or the plant **103** may contain an actuation module configured to control a vehicle parameter based on at least one of the command values Te_c_arb, Rat_c. For example, acceleration of the vehicle **9** may be controlled to optimize the fuel consumption rate. In some forms, the actuation module may be contained within the vehicle dynamics module **112** shown in FIG. **3**. Any vehicle system that varies an engine or transmission parameter may be referred to as an actuation module. In some forms, for example, the actuation module may vary the engine spark timing or the throttle, in order to control vehicle acceleration and/or axle torque.

Referring now to FIG. **6**, a flowchart depicting an example method for controlling the propulsion system **10** of the motor vehicle **9** is presented and generally designated at **300**. The method **300** may optionally begin with a step **302** of determining at least one requested value based on arbitrating between a driver requested value and an intervention requested value. For example, as explained above, with respect to the axle arbitration module **122**, a requested value, such as Ta_arb, may be determined by arbitrating between a driver axle torque requested Ta_dr and a plurality of axle intervention requested values A_i, such as A_i_1, A_i_2, A_i_3.

The method **300** may further include a step **304** of generating a plurality of sets of possible command values. The possible command values may be generated based in

part on the requested value or values, such as Ta_dr and Ta_arb, by an MPC module **202** or prediction module **204** of a multivariable controller **102**, as explained above.

The method **300** may also include a step **306** of determining a cost for each set of possible command values of the plurality of sets of possible command values, based on a first predetermined weighting value, a second predetermined weighting value, a plurality of predicted values, and a plurality of requested values (such as Ta_dr, Ta_arb, etc.), such as by a cost module **208**.

The method **300** may further include a step **308** of determining which set of possible command values of the plurality of sets of possible command values has a lowest cost, and a step **310** of selecting the set of possible command values that has the lowest cost to define a set of selected command values. The set of selected command values may include, for example, a selected transmission ratio commanded Rat_c and a selected engine output torque commanded Te_c, as explained above.

The method **300** may then proceed to an optional step **312** of performing an arbitration step comprising determining a desired command value by arbitrating between a selected command value of the set of selected command values and a command intervention value. For example, the step **312** may include arbitrating between the selected command value Te_c (selected engine output torque value) and a plurality of engine torque intervention values E_i, such as E_i_1, E_i_2, E_i_3, to arrive at the desired command value Te_c_arb. In some outcomes, the method **300** will include determining that the desired command value Te_c_arb is equal to one of the engine torque intervention values E_i after arbitrating between the selected command value Te_c of the plurality of selected command values and the engine torque intervention value E_i. Thus, the method **300** will include, in those circumstances, determining that Te_c_arb is equal to the engine torque intervention value E_i.

In some forms, the method **300** may also include generating a plurality of predicted actual axle torque values and a plurality of predicted actual fuel consumption rate values based on the plurality of sets of possible command values, such as Te_c, Rat_c, and determining the cost for each set of possible command values further based on a predicted actual axle torque value of the plurality of predicted axle torque values and a predicted actual fuel consumption rate value of the plurality of predicted actual fuel consumption rate values. The plurality of requested values used to generate the predicted values may include the driver axle torque requested Ta_dr, the engine output torque requested Te_r, the Rat_r transmission ratio requested, and the fuel consumption rate requested FR_r, which may be computed using the equations (1)-(4), as explained above. Furthermore, the method **300** may include determining the predicted values using the equations (7)-(9) above.

The method **300** may determine the engine torque intervention values E_i and the axle intervention requested values A_i similarly as explained above with respect to the control system **100**. For example, the method **300** may include determining the engine torque intervention value E_i from among the following: a transmission torque reduction request, an engine overspeed request, a boost request, a speed control request, an engine crank shutdown ring request, a power take off ring request, an exhaust O2 sensor ring request, a torque cut off ring request, a hybrid torque request, and a power take off control request; and the method **300** may include determining the axle intervention requested value A_i from among the following: a brake torque management request, a vehicle overspeed condition request, a traction control request, a deceleration fuel cut off request, a shaping request, a chassis system request, a performance launch request, a four wheel drive request, and an emergency autonomous braking request.

The method **300** may include a step **314** of controlling a vehicle parameter based on at least one of the desired command values Te_arb, Rat_c. In some forms, the method **300** may also include using the arbitrated engine torque command value Te_arb to determine the predicted values.

The method **300** may include additional steps to determine the selected engine output torque value Te_c, which are explained in more detail above, such as generating a number of predicted actual axle torques (at least first and second predicted actual axle torques) and a number of predicted actual fuel consumption rates (at least first and second predicted actual fuel consumption rates) based on a number of sets (at least two) of possible command values. For example, the first set of possible command values includes a first commanded engine output torque and a first commanded transmission ratio, the second set of possible command values includes a second commanded engine output torque and a second commanded transmission ratio, and so on as desired. These initial steps may be performed, for example, by the prediction module **204** shown in FIG. **5**. The method **300** may accomplish the steps **302**, **304**, **306**, **308**, **310**, **314** in any of the ways described above, such as by applying any of the equations (1)-(9).

The terms controller, control module, module, control, control unit, processor and similar terms refer to any one or various combinations of Application Specific Integrated Circuit(s) (ASIC), electronic circuit(s), central processing unit(s), e.g., microprocessor(s) and associated non-transitory memory component in the form of memory and storage devices (read only, programmable read only, random access, hard drive, etc.). The non-transitory memory component may be capable of storing machine readable instructions in the form of one or more software or firmware programs or routines, combinational logic circuit(s), input/output circuit(s) and devices, signal conditioning and buffer circuitry and other components that can be accessed by one or more processors to provide a described functionality.

Input/output circuit(s) and devices include analog/digital converters and related devices that monitor inputs from sensors, with such inputs monitored at a preset sampling frequency or in response to a triggering event. Software, firmware, programs, instructions, control routines, code, algorithms and similar terms can include any controller-executable instruction sets including calibrations and look-up tables. Each controller executes control routine(s) to provide desired functions, including monitoring inputs from sensing devices and other networked controllers and executing control and diagnostic instructions to control operation of actuators. Routines may be executed at regular intervals, for example each 100 microseconds during ongoing operation. Alternatively, routines may be executed in response to occurrence of a triggering event.

Communication between controllers, and communication between controllers, actuators and/or sensors may be accomplished using a direct wired link, a networked communication bus link, a wireless link or any another suitable communication link. Communication includes exchanging data signals in any suitable form, including, for example, electrical signals via a conductive medium, electromagnetic signals via air, optical signals via optical waveguides, and the like.

Data signals may include signals representing inputs from sensors, signals representing actuator commands, and com-

munication signals between controllers. The term 'model' refers to a processor-based or processor-executable code and associated calibration that simulates a physical existence of a device or a physical process. As used herein, the terms 'dynamic' and 'dynamically' describe steps or processes that are executed in real-time and are characterized by monitoring or otherwise determining states of parameters and regularly or periodically updating the states of the parameters during execution of a routine or between iterations of execution of the routine.

The control system **100** may be configured to execute each of the steps of the method **300**. Thus, the entire description with respect to FIGS. **1-6** may be applied by the control system **100** to effectuate the method **300** shown in FIG. **6**. Furthermore, the control system **100** may be or include a controller that includes a number of control logics that are configured to execute the steps of the method **300**.

The controller(s) of the control system **100** may include a computer-readable medium (also referred to as a processor-readable medium), including any non-transitory (e.g., tangible) medium that participates in providing data (e.g., instructions) that may be read by a computer (e.g., by a processor of a computer). Such a medium may take many forms, including, but not limited to, non-volatile media and volatile media. Non-volatile media may include, for example, optical or magnetic disks and other persistent memory. Volatile media may include, for example, dynamic random access memory (DRAM), which may constitute a main memory. Such instructions may be transmitted by one or more transmission media, including coaxial cables, copper wire and fiber optics, including the wires that comprise a system bus coupled to a processor of a computer. Some forms of computer-readable media include, for example, a floppy disk, a flexible disk, hard disk, magnetic tape, any other magnetic medium, a CD-ROM, DVD, any other optical medium, punch cards, paper tape, any other physical medium with patterns of holes, a RAM, a PROM, an EPROM, a FLASH-EEPROM, any other memory chip or cartridge, or any other medium from which a computer can read.

Look-up tables, databases, data repositories or other data stores described herein may include various kinds of mechanisms for storing, accessing, and retrieving various kinds of data, including a hierarchical database, a set of files in a file system, an application database in a proprietary format, a relational database management system (RDBMS), etc. Each such data store may be included within a computing device employing a computer operating system such as one of those mentioned above, and may be accessed via a network in any one or more of a variety of manners. A file system may be accessible from a computer operating system, and may include files stored in various formats. An RDBMS may employ the Structured Query Language (SQL) in addition to a language for creating, storing, editing, and executing stored procedures, such as the PL/SQL language mentioned above.

The detailed description and the drawings or figures are supportive and descriptive of the many aspects of the present disclosure. While certain aspects have been described in detail, various alternative aspects exist for practicing the disclosure as defined in the appended claims.

What is claimed is:

1. A method for controlling a propulsion system of a motor vehicle, the method comprising:

generating a plurality of sets of possible command values;

determining a cost for each set of possible command values of the plurality of sets of possible command values based on a first predetermined weighting value, a second predetermined weighting value, a plurality of predicted values, and a plurality of requested values;

determining which set of possible command values of the plurality of sets of possible command values has a lowest cost; and

selecting the set of possible command values that has the lowest cost to define a set of selected command values;

performing an arbitration step comprising at least one of the following arbitration procedures A and B:

A) determining at least one requested value of the plurality of requested values based on arbitrating between a driver requested value and an intervention requested value; and

B) determining a desired command value by arbitrating between a selected command value of the set of selected command values and a command intervention value; and

controlling a vehicle parameter based on the desired command value.

2. The method of claim **1**, wherein performing the arbitration step comprises performing both of the arbitrations procedures A and B.

3. The method of claim **2**, wherein:

the plurality of sets of possible command values includes a plurality of commanded engine output torque values;

the set of selected command values includes a selected engine output torque value; and

the command intervention value includes an engine torque intervention value.

4. The method of claim **3**, further comprising:

generating a plurality of predicted actual axle torque values and a plurality of predicted actual fuel consumption rate values based on the plurality of sets of possible command values, the plurality of sets of possible command values including a plurality of possible commanded transmission ratio values; and

determining the cost for each set of possible command values further based on a predicted actual axle torque value of the plurality of predicted axle torque values and a predicted actual fuel consumption rate value of the plurality of predicted actual fuel consumption rate values, the plurality of requested values including a driver axle torque requested, an engine output torque requested, a transmission ratio requested, and a fuel consumption rate requested.

5. The method of claim **4**, further comprising determining the plurality of predicted actual axle torque values and the plurality of predicted actual fuel consumption rate values with the following set of equations:

$$x_{k+1} = \left\{ A * x_k + B * \begin{bmatrix} \text{Te\_c\_arb} \\ \text{Rat\_c}_k \end{bmatrix} + v \right\} + K_{KF} * \left(\begin{bmatrix} \text{Te\_m}_k \\ \text{FR\_m}_k \\ \text{Rat\_m}_k \\ \text{Ta\_m}_k \end{bmatrix} - \begin{bmatrix} \text{Te\_a}_k \\ \text{FR\_a}_k \\ \text{Rat\_a}_k \\ \text{Ta\_a}_k \end{bmatrix} \right)$$

$$\begin{bmatrix} \text{Ta\_a}_{k+1} \\ \text{FR\_a}_{k+1} \end{bmatrix} = C * x_{k+1} + w$$

where

x_{k+1}=state variable at a prediction step k+1;

x_k=state variable at a prediction step k;

A=a state matrix;

B=an input matrix;

Te_c_arb=one of: engine output torque commanded at the prediction step k and the engine torque intervention value;

Rat_c_k=transmission ratio commanded at the prediction step k;

K_{KF}=Kalman filter gain;

Te_a_k=predicted actual engine output torque at the prediction step k;

FR_a_k=predicted actual fuel consumption rate at the prediction step k;

Rat_a_k=predicted actual transmission ratio at the prediction step k;

Ta_a_k=predicted actual axle torque at the prediction step k;

Te_m_k=measured engine output torque at the prediction step k;

FR_m_k=measured fuel consumption rate at the prediction step k;

Rat_m_k=measured transmission ratio at the prediction step k;

Ta_m_k=measured axle torque at the prediction step k;

Ta_a_{k+1}=predicted actual axle torque at the prediction step k+1;

FR_a_{k+1}=predicted actual fuel consumption rate at the prediction step k+1;

C=an output matrix;

v=process noise; and

w=measurement noise.

6. The method of claim **5**, further comprising:

determining that the desired command value is the engine torque intervention value after arbitrating between the selected command value of the plurality of selected command values and the engine torque intervention value; and

determining that Te_c_arb is equal to the engine torque intervention value.

7. The method of claim **5**, further comprising determining the engine torque intervention value from among the following: a transmission torque reduction request, an engine overspeed request, a boost request, a speed control request, an engine crank shutdown ring request, a power take off ring request, an exhaust O2 sensor ring request, a torque cut off ring request, a hybrid torque request, and a power take off control request.

8. The method of claim **7**, further comprising:

determining an accelerator pedal position (PP);

determining an engine speed (RPM);

determining a vehicle speed (V);

determining an air-fuel ratio (AF);

determining the driver axle torque requested (Ta_dr) based on the accelerator pedal position (PP) and the vehicle speed (V);

determining an arbitrated axle torque requested (Ta_arb) by selecting a winner between the driver axle torque requested (Ta_dr) and the intervention requested value (A_i);

determining a transmission ratio requested (Rat_r) based on the arbitrated axle torque requested (Ta_arb) and the vehicle speed (V);

determining the engine output torque requested (Te_r) based on the arbitrated axle torque requested (Ta_arb), the transmission ratio requested (Rat_r), and a final drive ratio (FD); and

determining the fuel consumption rate requested (FR_r) based on the driver axle torque requested (Ta_dr), the vehicle speed (V), the engine speed (RPM), and the air-fuel ratio (AF),

wherein the plurality of requested values includes the driver axle torque requested (Ta_dr), the fuel consumption rate requested (FR_r), the engine output torque requested (Te_r), and the transmission ratio requested (Rat_r).

9. The method of claim **8**, further comprising determining the intervention requested value from among the following: a brake torque management request, a vehicle overspeed condition request, a traction control request, a deceleration fuel cut off request, a shaping request, a chassis system request, a performance launch request, a four wheel drive request, and an emergency autonomous braking request.

10. The method of claim **9**, the plurality of selected command values including a selected transmission ratio command value, the method further comprising controlling a vehicle parameter based on at least one of the desired command values.

11. A control system for a propulsion system of a motor vehicle having a transmission and an engine, the control system comprising:

a command generator module configured to generate a plurality of sets of possible command values;

a cost module configured to:

determine a cost for each set of possible command values of the plurality of sets of possible command values based on a first predetermined weighting value, a second predetermined weighting value, a plurality of predicted values, and a plurality of requested values; and

determining which set of possible command values of the plurality of sets of possible command values has a lowest cost; and

a selection module configured to select the set of possible command values that has the lowest cost to define a set of selected command values;

an arbitration module configured to perform at least one of the following arbitration procedures A and B:

A) determine at least one requested value of the plurality of requested values based on arbitrating between a driver requested value and an intervention requested value; and

B) determine a desired command value by arbitrating between a selected command value of the set of selected command values and a command intervention value; and

an actuation module configured to control a vehicle parameter based on the desired command value.

12. The control system of claim **11**, at least one selected command value of the set of selected command values being a selected engine output torque value, the command intervention value being an engine torque intervention value, the driver requested value being an driver axle torque requested, the arbitration module being an engine torque arbitration module configured to determine the desired command value by selecting a winner between the selected engine output torque value and the engine torque intervention value, the control system further comprising an axle torque arbitration module configured to determine an arbitrated axle torque requested by selecting a winner between the driver axle torque requested and the intervention requested value.

13. The control system of claim **12**, further comprising a prediction module configured to generate a plurality of predicted actual axle torque values and a plurality of predicted actual fuel consumption rate values based on the plurality of sets of possible command values, the plurality of sets of possible command values including a plurality of possible commanded transmission ratio values and a plural-

ity of possible commanded engine torque values, wherein the cost module is configured to determine the cost for each set of possible command values further based on a predicted actual axle torque value of the plurality of predicted axle torque values and a predicted actual fuel consumption rate value of the plurality of predicted actual fuel consumption rate values, the plurality of requested values including the driver axle torque requested, an engine output torque requested, a transmission ratio requested, and a fuel consumption rate requested.

14. The control system of claim **13**, wherein the prediction module is configured to determine the plurality of predicted actual axle torque values and the plurality of predicted actual fuel consumption rate values with the following set of equations:

$$x_{k+1} = \left\{ A * x_k + B * \begin{bmatrix} \text{Te\_c\_arb} \\ \text{Rat\_c}_k \end{bmatrix} + v \right\} + K_{KF} * \left(\begin{bmatrix} \text{Te\_m}_k \\ \text{FR\_m}_k \\ \text{Rat\_m}_k \\ \text{Ta\_m}_k \end{bmatrix} - \begin{bmatrix} \text{Te\_a}_k \\ \text{FR\_a}_k \\ \text{Rat\_a}_k \\ \text{Ta\_a}_k \end{bmatrix} \right)$$

$$\begin{bmatrix} \text{Ta\_a}_{k+1} \\ \text{FR\_a}_{k+1} \end{bmatrix} = C * x_{k+1} + w$$

where

x_{k+1}=state variable at a prediction step k+1;

x_k=state variable at a prediction step k;

A=a state matrix;

B=an input matrix;

Te_c_arb=one of: engine output torque commanded at the prediction step k and the engine torque intervention value;

Rat_c_k=transmission ratio commanded at the prediction step k;

K_{KF}=a Kalman filter gain;

Te_a_k=predicted actual engine output torque at the prediction step k;

FR_a_k=predicted actual fuel consumption rate at the prediction step k;

Rat_a_k=predicted actual transmission ratio at the prediction step k;

Ta_a_k=predicted actual axle torque at the prediction step k;

Te_m_k=measured engine output torque at the prediction step k;

FR_m_k=measured fuel consumption rate at the prediction step k;

Rat_m_k=measured transmission ratio at the prediction step k;

Ta_m_k=measured axle torque at the prediction step k;

Ta_a_{k+1}=predicted actual axle torque at the prediction step k+1;

FR_a_{k+1}=predicted actual fuel consumption rate at the prediction step k+1;

C=an output matrix;

v=process noise; and

w=measurement noise.

15. The control system of claim **14**, wherein the engine torque arbitration module is configured to feed Te_c_arb back to the prediction module, the engine torque arbitration module being configured to determine the engine torque intervention value from among the following: a transmission torque reduction request, an engine overspeed request, a boost request, a speed control request, an engine crank shutdown ring request, a power take off ring request, an exhaust O2 sensor ring request, a torque cut off ring request, a hybrid torque request, and a power take off control request.

16. The control system of claim **15**, further comprising a steady state optimizer module configured to:

determine an accelerator pedal position (PP);

determine an engine speed (RPM);

determine a vehicle speed (V);

determine an air-fuel ratio (AF);

determine the driver axle torque requested (Ta_dr) based on the accelerator pedal position (PP) and the vehicle speed (V);

determine a transmission ratio requested (Rat_r) based on the arbitrated axle torque requested (Ta_arb) and the vehicle speed (V);

determine the engine output torque requested (Te_r) based on the arbitrated axle torque requested (Ta_arb), the transmission ratio requested (Rat_r), and a final drive ratio (FD); and

determine the fuel consumption rate requested (FR_r) based on the driver axle torque requested (Ta_dr), the vehicle speed (V), the engine speed (RPM), and the air-fuel ratio (AF).

17. The control system of claim **16**, wherein the axle torque arbitration module is configured to determine the intervention requested value from among the following: a brake torque management request, a vehicle overspeed condition request, a traction control request, a deceleration fuel cut off request, a shaping request, a chassis system request, a performance launch request, a four wheel drive request, and an emergency autonomous braking request.

18. The control system of claim **17**, the plurality of selected command values including a selected transmission ratio command value, the control system further comprising an actuation module configured to control a vehicle parameter based on at least one of the desired command values.

19. A propulsion system for a motor vehicle, comprising:

an engine operable to power the motor vehicle, the engine having an engine output shaft configured to transfer engine output torque;

a continuously variable transmission having a variator assembly including a first pulley and a second pulley, the first and second pulleys being rotatably coupled by a rotatable member, at least one of the first and second pulleys including a movable sheave translatable along an axis to selectively change a transmission ratio between the engine output shaft and a transmission output shaft;

a drive axle configured to be driven via the transmission output shaft, the drive axle being configured to output axle torque to a set of wheels; and

a control system comprising:

a prediction module configured to generate a plurality of predicted actual axle torque values and a plurality of predicted actual fuel consumption rate values based on a plurality of sets of possible command values, the plurality of sets of possible command values including a plurality of possible commanded transmission ratio values and a plurality of possible commanded engine torque values;

a cost module configured to:

determine a cost for each set of possible command values of the plurality of sets of possible command values based on a predicted actual axle torque value of the plurality of predicted axle torque values, a predicted actual fuel consumption rate value of the plurality of predicted actual fuel consumption rate values, a first predetermined

weighting value, a second predetermined weighting value, and a plurality of requested values, the plurality of requested values including the driver axle torque requested, an engine output torque requested, a transmission ratio requested, and a fuel consumption rate requested; and

determine which set of possible command values of the plurality of sets of possible command values has a lowest cost;

a selection module configured to select the set of possible command values that has the lowest cost to define a set of selected command values;

an axle torque arbitration module configured to determine at least one requested value of the plurality of requested values based on arbitrating between a driver axle torque requested and an axle intervention requested value;

an engine torque arbitration module configured to determine a desired command value by arbitrating between a selected engine torque command value of the set of selected command values and an engine torque command intervention value; and

an actuation module configured to control a vehicle parameter based on the desired command value.

20. The propulsion system of claim **19**, wherein the prediction module is configured to determine the plurality of predicted actual axle torque values and the plurality of predicted actual fuel consumption rate values with the following set of equations:

$$x_{k+1} = \left\{ A * x_k + B * \begin{bmatrix} \text{Te\_c\_arb} \\ \text{Rat\_c}_k \end{bmatrix} + v \right\} + K_{KF} * \left(\begin{bmatrix} \text{Te\_m}_k \\ \text{FR\_m}_k \\ \text{Rat\_m}_k \\ \text{Ta\_m}_k \end{bmatrix} - \begin{bmatrix} \text{Te\_a}_k \\ \text{FR\_a}_k \\ \text{Rat\_a}_k \\ \text{Ta\_a}_k \end{bmatrix} \right)$$

$$\begin{bmatrix} \text{Ta\_a}_{k+1} \\ \text{FR\_a}_{k+1} \end{bmatrix} = C * x_{k+1} + w$$

where

x_{k+1}=state variable at a prediction step k+1;

x_k=state variable at a prediction step k;

A=a state matrix;

B=an input matrix;

Te_c_arb=one of: engine output torque commanded at the prediction step k and the engine torque intervention value;

Rat_c_k=transmission ratio commanded at the prediction step k;

K_{KF}=a Kalman filter gain;

Te_a_k=predicted actual engine output torque at the prediction step k;

FR_a_k=predicted actual fuel consumption rate at the prediction step k;

Rat_a_k=predicted actual transmission ratio at the prediction step k;

Ta_a_k=predicted actual axle torque at the prediction step k;

Te_m_k=measured engine output torque at the prediction step k;

FR_m_k=measured fuel consumption rate at the prediction step k;

Rat_m_k=measured transmission ratio at the prediction step k;

Ta_m_k=measured axle torque at the prediction step k;

Ta_a_{k+1}=predicted actual axle torque at the prediction step k+1;

FR_a_{k+1}=predicted actual fuel consumption rate at the prediction step k+1;

C=an output matrix;

v=process noise; and

w=measurement noise,

wherein the engine torque arbitration module is configured to feed Te_c_arb back to the prediction module, request, a hybrid torque request, and a power take off control request, the control system further comprising a steady state optimizer module configured to:

determine an accelerator pedal position (PP);

determine an engine speed (RPM);

determine a vehicle speed (V);

determine an air-fuel ratio (AF);

determine the driver axle torque requested (Ta_dr) based on the accelerator pedal position (PP) and the vehicle speed (V);

determine a transmission ratio requested (Rat_r) based on the arbitrated axle torque requested (Ta_arb) and the vehicle speed (V);

determine the engine output torque requested (Te_r) based on the arbitrated axle torque requested (Ta_arb), the transmission ratio requested (Rat_r), and a final drive ratio (FD); and

determine the fuel consumption rate requested (FR_r) based on the driver axle torque requested (Ta_dr), the vehicle speed (V), the engine speed (RPM), and the air-fuel ratio (AF).

* * * * *